OWNER'S MANUAL

VALOR 6

10025377-D

OWNER'S MANUAL

48V ELECTRIC

VALOR 6

MODEL YEAR 2024 - CURRENT

CONTACT INFORMATION
Textron Specialized Vehicles, Inc.
1451 Marvin Griffin Road
Augusta, Georgia, USA 30906-3852

1-800-774-3946 Technical Assistance & Warranty
1-888-438-3946 Service Parts
001-706-798-4311 International
www.ezgo.com

WELCOME

Thank you for purchasing this vehicle. Before driving your new vehicle, read this owner's manual to familiarize yourself with safe driving practices, operation, features, and controls.

This manual contains instructions for minor maintenance only. Information about major repairs can be found in the service manual. Your dealer has thorough knowledge of your vehicle and wants your total satisfaction with your purchase. We recommend you return to your dealership for all of your service needs during and after the warranty period.

Repair or replacement parts can be purchased from your dealer or through the manufacturer's parts and accessories department.

These are original instructions as defined by 2006/42/EC.

Textron Specialized Vehicles, Inc. maintains the right to change the design of the vehicle without responsibility to make the changes on units purchased before changes were made. The information in this manual can change without notice.

All information in this owner's manual is based on the latest product information at the time of publication. Due to constant improvements in the design and quality of production components, some discrepancies may be found between your vehicle and the information presented in this publication. The content in this publication is intended for reference use only. The manufacturer is not liable for omissions or inaccuracies. Any reprinting or reuse of the content in this publication, whether whole or in part, is expressly prohibited.

Printed in USA

INTRODUCTION

MANUFACTURER'S INTENDED USE 1
WARRANTY AND REGISTRATION 1
BATTERY PROLONGED STORAGE 1
BATTERY DISPOSAL 1
VEHICLE IDENTIFICATION NUMBERS 2
SERVICE AND PARTS MANUALS 2

SAFETY LABELS

SAFETY LABELS 3
- Operating (CE) (P/N 651654) 3
- Flip Seat/Load Deck Warning (P/N 697425) 3
- Pinch Warning Label (P/N 651671) 4
- Operation (P/N 10013899) 4
- Electric Shock Warning (P/N 71415G01) 5
- Patent Notice Label (P/N 10005569) 5
- Hot Motor Warning (CE) (P/N 75696G01) 6

SAFETY

MAXIMUM LOAD / MAXIMUM VEHICLE WEIGHT CAPACITY 7
TIRE PRESSURE 7
OPERATOR SAFETY 7
- Unauthorized Operation 8
- Operating without Instruction 8
- Alcohol or Drugs 8
- Passenger 8
- Before Operating 8
- Load Operation 9
- Driving on Pavement 9
- Driving on Public Roads 9
- Stalling on a Hill 9
- Driving in Reverse 9
- Driving a Damaged Vehicle 9
- Driving at Maximum Speeds 9
- Turning 9
- Driving Uphill 9
- Driving Downhill 9
- Tires 9
- Slippery Terrain 10

BATTERY CHARGING 10
VEHICLE LIFTING 10
VEHICLE MODIFICATION 10
MAINTENANCE SAFETY 10

FEATURES AND CONTROLS

KEY SWITCH / DIRECTION SELECTOR 11
STATE OF CHARGE METER 11
CUP HOLDER 11
HEADLIGHT SWITCH 11

TABLE OF CONTENTS

HORN 11
BRAKE PEDAL 12
Brake Pedal 12
Parking Brake Pedal 12
ACCELERATOR PEDAL 12
SEAT BOTTOM 12
CHARGER RECEPTACLE 12
GLOVE BOX / STORAGE COMPARTMENTS 12
CANOPY TOP AND WINDSHIELD 13
REAR FACING SEAT AND LOAD DECK 13

OPERATION

SAFETY 15
BEFORE INITIAL USE 15
PRE-RIDE INSPECTION 15
BATTERY CHARGER 16
PERFORMANCE FEATURES 16
Speed Control 16
Pedal-Up Braking 16
Walk-Away Feature 17
Anti-Roll Back Feature 17
Anti-Stall Feature 17
High Pedal Disable Feature 17
Diagnostic Mode Feature 17
STARTING AND STOPPING THE VEHICLE 17
Starting on a Hill 18
ACCELERATING 18
BRAKING 18
Coasting 18
DRIVING WITH PASSENGERS 19
SLIPPERY SURFACES 19
DRIVING UPHILL 19
TRAVERSING HILLSIDES 19
DRIVING DOWNHILL 20
STALLING ON A HILL 20
DRIVING IN REVERSE 20
PARKING THE VEHICLE 21
HAULING CARGO ON THE LOAD DECK 21
MAXIMUM LOAD DECK CAPACITY/MAXIMUM WEIGHT CAPACITY 22
FLIP SEAT/ LOAD DECK OPERATION 22

VEHICLE MAINTENANCE

MAINTENANCE SAFETY 23
SCHEDULED MAINTENANCE 24
Severe Use Conditions 24
SCHEDULED MAINTENANCE CHART 24
RECOMMENDED LUBRICANTS AND FLUIDS 25
REPLACEMENT OF MAINTENANCE ITEMS 25
LIFTING THE VEHICLE 26

Lifting Front 26
Lifting Rear 26
Lowering Vehicle 26
VEHICLE CLEANING AND CARE 27
Washing the Vehicle 27
Polishing the Vehicle 27
TIRES 27
Tire Pressure 28
Tire Repair 28
Tire Replacement 28
WHEELS 28
Wheel Removal 29
Wheel Installation 29
LIGHTS 29
Halogen Headlight Bulb Replacement 29
Brake Light 30
FUSE REPLACEMENT 30
CONTROLLER SYSTEM TEST 30
REAR AXLE 30
Checking the Lubricant Level 30
LUBRICATION 31
BRAKES 32
Periodic Brake Test 32
BATTERIES 33
BATTERY DISPOSAL 33
BATTERY CLEANING 33
BATTERY CHARGING AND MAINTENANCE 34
At Each Charging Cycle 34
Monthly 34
Electrolyte Level and Water 34
BATTERY REPLACEMENT 36
BATTERY STORAGE 37
BATTERY CHARGING 38
AC Voltage 38
TROUBLESHOOTING 38
Using A Hydrometer 39
TRANSPORTING THE VEHICLE 40
Towing the Vehicle 40
Hauling the Vehicle 40

SPECIFICATIONS

VALOR 6 41

APPENDIX A

BATTERY CHARGER USER'S GUIDE 45

INTRODUCTION

The following symbols appear throughout this manual and on vehicle labels. Your safety is involved when these symbols are used. Become familiar with their meanings before reading the manual.

DANGER — **DANGER indicates a hazardous situation that, if not avoided, will result in death or serious injury.**

WARNING — **WARNING indicates a hazardous situation that, if not avoided, could result in death or serious injury.**

CAUTION — **CAUTION indicates a hazardous situation that, if not avoided, could result in minor or moderate injury.**

The PROHIBITION SAFETY SIGN indicates an action NOT to take in order to avoid a hazard.

The MANDATORY ACTION SIGN indicates an action that NEEDS to be taken to avoid a hazard.

WARNING — **Failure to comply with the warnings in this manual can result in severe injury or death.**

WARNING — **Read this entire manual carefully before operating this vehicle. Do not attempt to operate this vehicle until you have thorough knowledge of the controls and features.**

WARNING — **Regular inspections and maintenance, along with good operating techniques, will help ensure your safe enjoyment of the capabilities and reliability of this vehicle.**

This vehicle was designed and manufactured in the United States of America (USA). The standards and specifications in the following information originate in the USA unless otherwise indicated.

MANUFACTURER'S INTENDED USE

This vehicle is designed and manufactured for off road use only. Use on public streets, roads, or highways is illegal in most areas and increases the risk of an accident involving other vehicles and people. This vehicle does not meet FMVSS (Federal Motor Vehicle Safety Standards) for public street, road, or highway use.

Check all laws and regulations before choosing an area to operate your vehicle.

WARRANTY AND REGISTRATION

A vehicle warranty statement is included with the purchase of a new vehicle.

Register your new vehicle at www.ezgo.com.

Use Original Equipment Manufacturer (OEM) approved parts to keep the vehicle warranty effective.

All information, including coverage, limitations, exclusions, and how to obtain warranty service is included in the literature package with the purchase of the vehicle. It can also be obtained from your dealer.

BATTERY PROLONGED STORAGE

NOTICE: Improper storage may damage, destroy or cause permanent loss of battery capacity. Do not exceed storage time or temperature limits. Batteries must be charged to the correct level before storage. Storing fully depleted batteries will make them permanently unusable.

Batteries discharge over time. The rate of discharge changes according to the ambient temperature, the age, and condition of the batteries.

Completely charged batteries will not freeze in winter temperatures unless the temperature is less than -75°F (- 60°C).

BATTERY DISPOSAL

Lead-acid batteries are recyclable. Return discarded batteries to distributor, manufacturer or lead smelter for recycling. For neutralized spills, put any residue in acid-resistant containers with absorbent material such as sand. Dispose in accordance with local, state and federal regulations for acid and lead compounds. Contact local or state environmental authorized people for the disposal information.

VEHICLE IDENTIFICATION NUMBERS

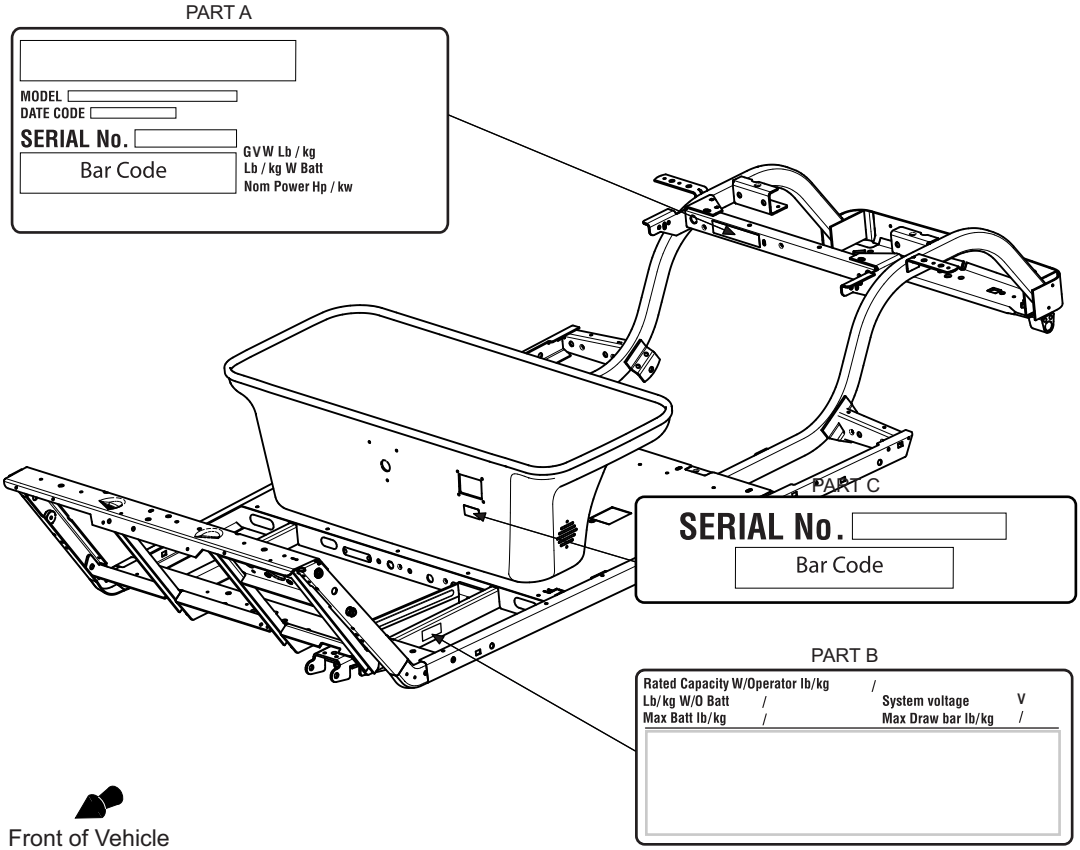

Record the vehicle identification numbers in the spaces provided below. These identification numbers are required when ordering parts from the manufacturer.

Vehicle Model Number: _____

Frame PIN: _____

SERVICE AND PARTS MANUALS

The following manuals can be purchased through your dealer:

- service manual
- parts manual

SAFETY LABELS

Safety and warning labels are on the vehicle for your protection. Read carefully and comply with the instructions on the labels. If any label shown in this manual is different from the label on your vehicle, always follow the instructions on the vehicle label.

If a label comes off or becomes illegible, contact your dealer for a replacement. The part number is provided in this manual, printed on the label, or can be obtained from your dealer.

Operating (CE) (P/N 651654)

Located on the dash.

Flip Seat/Load Deck Warning (P/N 697425)

Located on the rear facing seat grab handle.

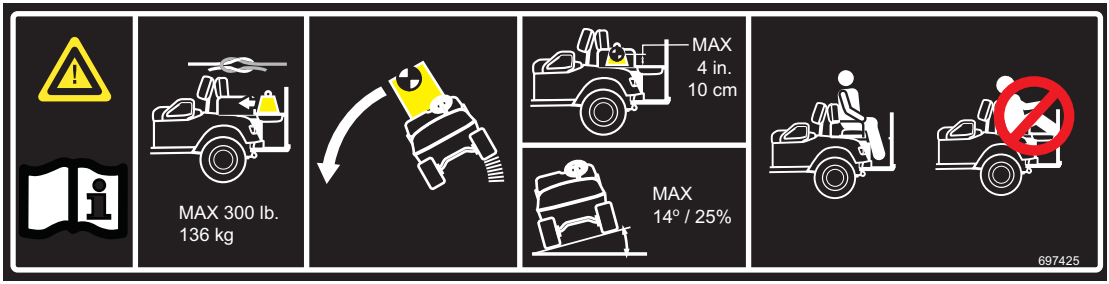

Safety Labels

Pinch Warning Label (P/N 651671)

Located on the rear facing seat.

Operation (P/N 10013899)

Located on the dash.

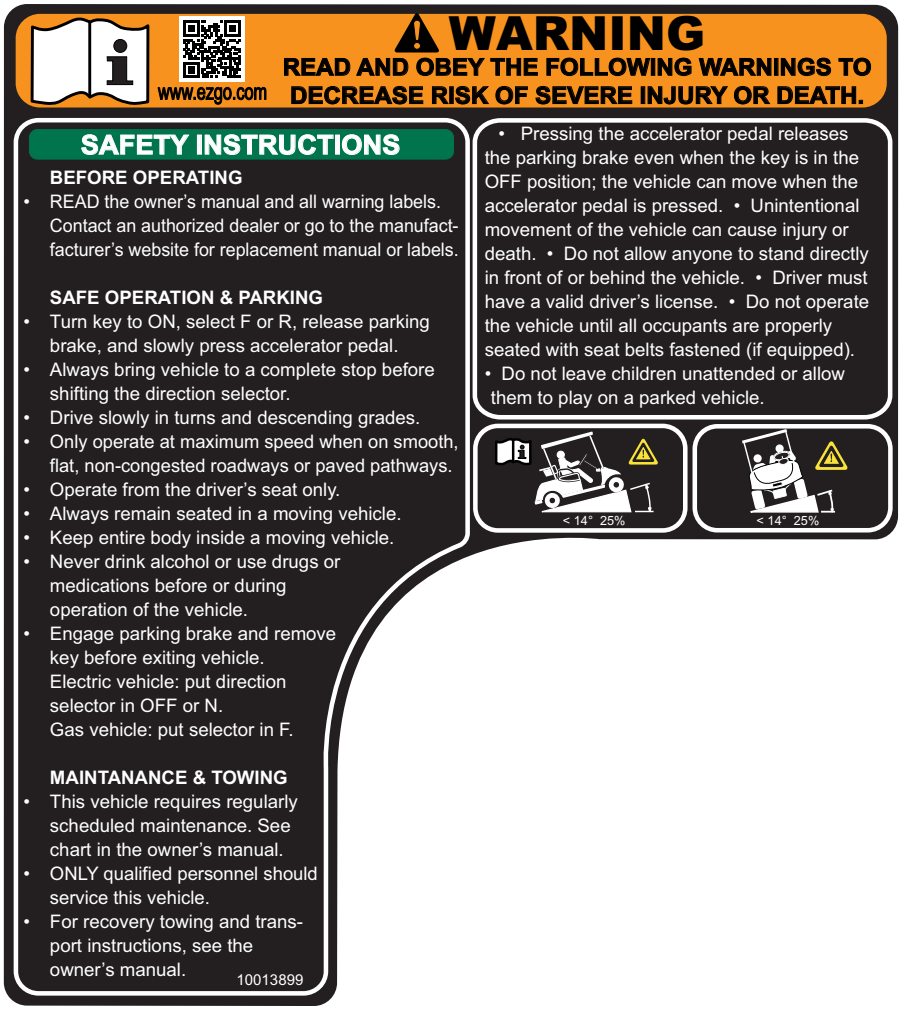

Electric Shock Warning (P/N 71415G01)

Located on the controller cover.

Patent Notice Label (P/N 10005569)

Located inside dash storage area.

PATENT NOTICE 10005569

This product or components thereof may be covered by one or more patents or pending applications

See *patents.txtsv.com* for details.

⚠ **WARNING** CANCER AND REPRODUCTIVE HARM

For more information, go to P65Warning.ca.gov/passenger-vehicle

Hot Motor Warning (CE) (P/N 75696G01)

SAFETY

For questions about the vehicle or the material in this manual, see the contact information on page 1 or on the back of this publication.

MAXIMUM LOAD / MAXIMUM VEHICLE WEIGHT CAPACITY

WARNING **Exceeding the weight capacities can cause the loss of vehicle control and possible injury or death.**

Always fill the front seat to capacity prior to seating any passengers on the rear seats.

Maximum Vehicle Weight Capacity	1200 lbs. (544 kg)
Maximum Load Deck Capacity	300 lbs. (136 kg)

- Do not exceed the maximum load deck capacity.
- Do not exceed the maximum vehicle weight capacity (includes weight of operator, passenger, cargo, and accessories).
- Always fill the front seat to capacity prior to seating any passengers on the rear seat.

TIRE PRESSURE

WARNING **Improper tire pressure or uneven tire pressure can cause the loss of vehicle control and possible injury or death.**

Maintaining the correct tire inflation pressure is essential for safe vehicle operation. The inflation pressure can vary within the recommended range to suit the condition of the terrain.

TIRE PRESSURE RANGE	TERRAIN CONDITIONS	RECOMMENDATION
18 - 22 psi (124 - 152 kPa)	Hard surfaces or pavement	Inflate to higher pressure within the range; never exceed maximum pressure indicated.
	Soft terrain or turf	Inflate to lower pressure within the range to reduce potential damage to the terrain or turf.

OPERATOR SAFETY

Safe and responsible use of this vehicle is necessary to prevent dangerous conditions for the operator, passengers and other people in the area of operation. This section of the manual provides information on the safe operation of the vehicle. Make sure to read, understand and comply with all of this information to decrease the risk of personal injury or death.

WARNING **Serious injury or death can occur if you do not follow the instructions and procedures shown in this owner's manual.**

- Read this entire manual and all product labels carefully. Follow the safety information and operating procedures described.
- Operate your vehicle responsibly to prevent dangerous conditions for the operator, passengers and other people in the area of operation
- Operate the vehicle responsibly and keep the vehicle in safe condition of operation.
- A damaged vehicle or a vehicle that is not functioning properly is dangerous and must not be operated until repairs are made.
- Do not carry a passenger until you have a minimum of two hours driving experience on this vehicle.
- Keep feet, legs, hands, and arms inside the vehicle at all times.
- The driver must keep both hands on the steering wheel and both feet on the floor or pedals.
- Inspect the vehicle before each use to make sure it is in safe operating condition. Perform the pre-ride inspection described in this manual. See page 15.
- Always have the vehicle checked by an authorized dealer if it is involved in an accident.
- Always put the direction selector in forward (F) and engage the parking brake before you exit the vehicle.
- Remove the key when the vehicle is not in use to prevent accidental starting, unauthorized use by someone below the age of 16, or someone without a driver's license and proper training.

SAFETY

- Drive the vehicle at appropriate speeds for the terrain and conditions. Be aware of environmental conditions that change the terrain and your ability to control the vehicle.
- Do not drive on excessively steep hills. Evaluate the terrain before descending a hill. Drive slowly and deliberately. Use the brake to limit speed and maintain control. Sudden braking or turning can cause the loss of vehicle control. Drive straight down the hill. Do not drive across the hill.
- Operate only in approved areas. Follow all applicable safety rules for the area.
- Avoid driving on terrain that is too rough for your vehicle's capabilities and your driving skills.
- Before you drive in the reverse direction, make sure the area behind the vehicle is clear. Accelerate slowly and avoid making sharp turns.
- Make sure the direction selector is in the correct position before pressing the accelerator pedal.
- Decrease the speed before and during turns.
- Decrease the speed when driving on wet or slippery surfaces.
- Bring the vehicle to a complete stop before moving the direction selector.
- Do not exceed load deck weight capacity. Do not exceed the occupant capacity. See *VALOR 6* on page 41 for the vehicle load and seat capacity.
- If there is a risk of lightning, leave the vehicle and look for a safe location to wait until the lightning has stopped.

Additional information about safety is included throughout this manual or can be obtained from your dealer.

WARNING **Failure to operate this vehicle as instructed can cause collision, loss of control, or roll-over resulting in severe injury or death. Follow all safety warnings in this section of the owner's manual. See the OPERATION section of the owner's manual for operating procedures and additional safety information.**

Unauthorized Operation

This vehicle is for adult use only. Any person below the age of 16 is not permitted to operate the vehicle.

Any person who does not have a valid driver's license is not permitted to operate the vehicle.

Any person who is below the height of 59 in. (150 cm) is not permitted to operate the vehicle.

Leaving the keys in the key switch allows unauthorized operation of the vehicle by someone under 16 years of age, an unlicensed driver or someone who does not meet the height requirement. Always remove the key when the vehicle is not in operation.

Operating without Instruction

Operation of this vehicle without proper instruction increases the risk of an accident. The operator must understand how to operate the vehicle correctly in different situations and on different types of terrain.

All operators must read, understand, and comply with the owner's manual and all warning and instruction labels before operating the vehicle.

Alcohol or Drugs

Operation of the vehicle during or after consuming alcohol or drugs can adversely affect operator judgment, reaction time, balance and perception.

Never drink alcohol or use drugs or medications before or during operation of the vehicle.

Passenger

All passengers must be at least 59 in. (150 cm) tall. Passengers must be able to sit with their back against the seat, and both feet on the floor.

For additional safety and operational information, see *Driving With PASSENGERS* on page 19.

Before Operating

Perform the *PRE-RIDE INSPECTION* on page 15 before each use to make sure the vehicle is in safe operating condition. Failure to inspect and confirm that the vehicle is safe to operate increases the risk of an accident.

Follow all inspection and maintenance procedures and schedules described in this owner's manual. See *SCHEDULED MAINTENANCE* on page 24

Load Operation

The weight of cargo and occupants affects vehicle operation. Carefully calculate how the vehicle is loaded and how to safely operate it. Follow the instructions in this manual for loading guidelines and tire pressure.

Do not exceed weight capacities specified for your vehicle. Capacities are listed in *Maximum Cargo Load/Maximum Weight Capacity* on page 11 of this manual and also on the label affixed to the rear grab handle. As passenger weight increases, cargo weight needs to be adjusted to ensure the maximum vehicle weight capacity is not exceeded.

Tire pressure must be adjusted to accommodate the load being carried. See *Tire Pressure* on page 7 for pressure specifications.

Verify tire pressure, and drive slowly and carefully to maintain control of the vehicle if driving under any of the following conditions:

- passenger and/or cargo exceeds half the maximum weight capacity
- driving over obstacles
- climbing a hill

Driving on Pavement

Driving the vehicle on paved surfaces can affect handling characteristics and increase tire wear.

If possible, avoid driving on paved surfaces. If unavoidable, drive slowly, travel short distances and avoid sudden turns or stops.

Driving on Public Roads

Driving this vehicle on public streets, roads or highways could result in a collision with another vehicle. Most areas prohibit the operation of this vehicle on public streets, roads or highways, and can result in traffic violations and fines.

Stalling on a Hill

A rollover can result from stalling or rolling backward while climbing a hill. Drive uphill at a constant speed. See procedure on page 20 for maintaining control of your vehicle if it stalls on a hill.

Driving in Reverse

Make sure the area behind the vehicle is clear before operating in reverse. After making sure it is clear and safe to operate in reverse, accelerate slowly. Avoid making sharp turns in reverse. See *Driving in Reverse* on page 20.

Driving a Damaged Vehicle

Driving a damaged vehicle is not safe.

If the vehicle has been involved in any type of accident, have it inspected by a qualified service dealer to verify that it is safe for operation.

Driving at Maximum Speeds

Maximum speed operation increases the risk of loss of control. Always drive at a speed that is appropriate for the terrain, visibility, operating conditions, and your skill and experience level. Use the brake to control speed and maintain control of the vehicle.

Turning

Improper or careless turning can cause loss of traction, loss of control, accident, or rollover. Do not turn quickly or at sharp angles. Do not turn at high speeds. Practice turning at slow speeds before attempting to turn at faster speeds.

Driving Uphill

Do not climb hills that are too steep for the vehicle or your driving abilities. Loss of vehicle control or rollover can result from climbing hills incorrectly. See *Driving Uphill* on page 19.

Driving Downhill

Inspect the terrain before descending a hill. Avoid driving across hills. Use the brake to limit speed and maintain control. Loss of vehicle control or rollover can result from driving downhill incorrectly. See *Driving Downhill* on page 20.

Tires

Operating the vehicle with the incorrect tires or with the incorrect or uneven tire pressure can cause loss of control or an accident. Always use the tires specified for the vehicle. See Vehicle Specification on page 47. Always maintain the correct tire pressures as specified in *Tire Pressure* on page 7.

Slippery Terrain

Driving on rough, wet, or loose terrain increases the risk of loss of traction or control and accident or rollover. Drive slowly and use the correct turning procedures when operating on slippery surfaces.

Tires that have lost traction and then regain traction suddenly can cause loss of vehicle control or rollover. Refer to *Slippery Surfaces* on page 19 for operational information.

BATTERY CHARGING

Explosive hydrogen gas is created during the charging cycle of the batteries.Good ventilation is required to remove gas from enclosed spaces. The air must change every 12 minutes. Never charge a vehicle near flammable materials, open flames, or sparks. Never charge a vehicle near gas water heaters or furnaces.

VEHICLE LIFTING

The vehicle must be on a firm and level surface for lifting. Remain constantly aware that the vehicle is not stable during the lifting process. Do not get under a vehicle until you verify that it is stable on the jack stands. Never get under a vehicle while it is on a jack only. Put wheel chocks in front of and behind the wheels that are not being lifted. Do not allow anyone to remain or get on the vehicle at any time during the lifting process.

Read and comply with all warnings and follow the lifting procedures described in *LIFTING THE VEHICLE* on page 26.

VEHICLE MODIFICATION

⚠ WARNING **Removing some items from the vehicle can change the designed handling characteristics and present a significant safety risk.**

Do not install any accessory not approved by manufacturer. Do not modify the vehicle to increase the speed or power. Any modifications or installation of accessories not approved by the manufacturer can create a safety hazard and increase the risk of injury.

The warranty will be terminated if the vehicle is modified to increase vehicle speed.

The warranty may be terminated if the original (or equivalent) replacement parts are not installed on the vehicle.

The addition of some accessories can change the handling characteristics of the vehicle. Use only manufacturer approved accessories, and familiarize yourself with their function and effect on the vehicle.

MAINTENANCE SAFETY

Routine and scheduled maintenance of this vehicle is necessary to keep the vehicle in safe and reliable condition. This section of the manual provides safety information for performing maintenance on your vehicle. Make sure to read, understand, and comply with all of this information to decrease the risk of personal injury or death.

⚠ WARNING **Serious injury or death can occur if the instructions and procedures shown in this owner's manual are not followed.**

- Read this entire manual and all product labels carefully. Follow the procedures and comply with the safety information in this manual while performing vehicle service or maintenance.
- Use the tools shown in the tool list and wear the specified safety equipment when performing vehicle service or maintenance.
- Remove all jewelry before servicing the vehicle.
- Do not allow loose clothing or hair to contact the moving parts.
- Do not touch hot objects.
- The drive wheels must be lifted and supported on jack stands before performing any service to the power-train.
- Use wheel chocks and support the vehicle on jack stands. NEVER get under a vehicle that is supported by a jack. Lift the vehicle following the instructions in *LIFTING THE VEHICLE* on page 26

•When servicing the vehicle, always wear eye protection. Be careful when working around batteries, using solvents, or compressed air.

•Use insulated tools within the battery area to prevent sparks or battery explosion.

•To prevent the risk of battery explosion, keep all flammable materials, open flames or sparks away from the battery.

- Hydrogen gas is produced as the batteries are charged, Charge the batteries only in well ventilated areas.
- Maintain constant awareness that some components are heavy, spring loaded, corrosive, explosive, can cause high amperage, or get extremely hot. Keep your hands, face, feet, and body away from any area that can expose them to injury in the event that an unexpected situation occurs.
- After making repairs or performing maintenance, test the vehicle in a safe area that is free from vehicle and person traffic.

FEATURES AND CONTROLS

NOTICE: Additional 12V accessories must be connected to the DC to DC converter.

KEY SWITCH / DIRECTION SELECTOR

CAUTION **To decrease the risk of component damage, bring the vehicle to a complete stop before moving the key switch.**

NOTICE: Some factory installed accessories continue to operate with the key switch in the OFF position. Leaving these accessories activated the vehicle is shut down can cause the battery to discharge.

The key switch/direction selector is a four-position switch.

- OFF - vehicle is disabled.
- ON/N - activates vehicle electronics and accessory power.
- R - allows the vehicle to be driven in reverse and activates the reverse warning indicator.
- F - allows the vehicle to be driven in the forward direction.

STATE OF CHARGE METER

The state of charge meter is on the dash panel beside the key switch. It indicates the amount of usable power in the batteries, with F indicating a full charge on the battery pack and E indicating low charge. The yellow light indicates the batteries must be charged immediately.

CUP HOLDER

The vehicle has a center cup holder that will accommodate four beverage containers.

HEADLIGHT SWITCH

The headlight switch is a two-position switch.

- upper – on
- lower – off

HORN

The horn switch is located on the center of dash to the left of the light switch. The horn is activated when the top of the rocker switch is pressed.

BRAKE PEDAL

The brake pedal is a combination brake and parking brake pedal.

Brake Pedal

The brake pedal is the bottom section of the pedal on the floorboard.

Pressure applied to the brake pedal slows the speed or bring the vehicle to a complete stop.

Parking Brake Pedal

The parking brake is the upper pedal. It allows the operator to lock the brake when the vehicle is parked to prevent accidental movement.

To engage the parking brake, press the upper pedal until it locks into place.

Quickly press and release the lower pedal to disengage.

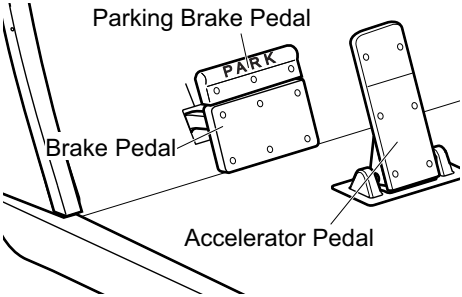

NOTICE: If the key switch is in the ON position and the parking rake is engaged, the brake will release when you press the accelerator pedal and can cause the vehicle to move suddenly. This is a feature to make sure the vehicle is not driven with the parking brake engaged. Pressing the accelerator pedal is not the recommended method to release the parking brake.

ACCELERATOR PEDAL

The accelerator pedal is the narrow pedal to the right. It activates the motor and controls the acceleration of the vehicle.

Pressure applied to the accelerator pedal increases vehicle speed.

SEAT BOTTOM

The forward facing bench seat is designed for two occupants.

Lift up on either hip restraint to pivot the seat bottom forward and access the components underneath. Pivot and lift up on the seat to completely remove it from the vehicle.

CHARGER RECEPTACLE

The charger receptacle is located on the front wall of the seat.

GLOVE BOX / STORAGE COMPARTMENTS

The glove box provides storage space for small items.

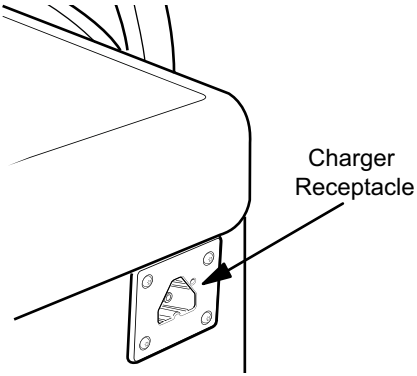

CANOPY TOP AND WINDSHIELD

WARNING

The canopy top does not provide protection from rollover or falling objects.

The windshield does not provide protection from tree branches or moving objects.

NOTICE: To prevent damage to the vehicle, do not hold on to the canopy top struts.

The canopy top and windshield provide some protection from the elements, but do not keep the operator and passenger dry in heavy rain.

This vehicle is not equipped with seat belt, and the canopy top is not designed to provide rollover protection. In addition, the canopy top does not protect against falling objects, nor does the windshield protect against flying objects and tree limbs.

REAR FACING SEAT AND LOAD DECK

WARNING

Do not allow passengers to ride on the load deck. Severe injury or death could result if the vehicle is involved in an accident or if the vehicle makes a sudden change in direction.

To prevent the risk of tipping the vehicle, occupants must fill the forward facing seat prior to filling the rear facing seat.

The rear facing seat will accommodate two passengers, one on each side of the seat. Passengers must remain seated while the vehicle is in motion. Hand holds are provided, one on each side of the seat and one mounted to the footrest in the center.

Pivoting the seat bottom towards the rear of the vehicle will make the load deck available. When using the load deck always:

- Place the load as far forward as possible.
- Secure the load on the load deck to prevent the load from moving.
- Make sure the center of gravity is less than 4 inches (10 cm) above the load deck.
- Do not exceed the load capacity of the load deck. The maximum capacity of the load deck is 300 lbs. (136 kg).

OPERATION

SAFETY

WARNING **Failure to operate the vehicle correctly can result in a collision, loss of control, accident or rollover, and cause serious injury or death. Follow all operation procedures in this section of the manual. Read and comply with all safety warnings in the safety section of this owner's manual.**

BEFORE INITIAL USE

To prepare the new vehicle for operation, complete the following:

- Remove the protective plastic from the seats.
- Check for possible leaks that may have developed during shipment of the vehicle.

WARNING **Explosive hydrogen gas is created during the charge cycle of the batteries. Proper ventilation is necessary to remove the gas from enclosed spaces. The air must change every 12 minutes.**

Never charge a vehicle near flammable materials, open flames, or sparks. Never charge a vehicle near gas water heaters or furnaces.

- Charge batteries.
- Perform the following pre-ride inspection.

PRE-RIDE INSPECTION

Inspect and verify that the vehicle is in safe operating condition before each use to decrease the risk of an accident. Check the items in the table to help ensure safe and reliable operation.

Item	Check	Page
Batteries	Check charge level	
Brake system/pedal travel	Check for proper operation.	24
Parking brake	Ensure vehicle does not roll when the parking brake is engaged.	
Front suspension	Inspect. Lubricate if necessary. Check for loose or missing hardware.	
Rear suspension	Inspect. Lubricate if necessary. Check for loose or missing hardware.	
Steering	Check for smooth and free operation.	
Tires	Check condition and pressure.	27
Wheel hardware	Check for loose or missing hardware.	
Frame hardware	Check for loose or missing hardware.	
Fluid leakage	Inspect vehicle for leaks.	
Switches	Check operation.	
Reverse warning alarm	Check operation.	
Lights	Check operation.	29

BATTERY CHARGER

The charger should be operated in accordance with the charger manufacturer's instructions. Always place the charger outside the vehicle before and during the charging cycle. Never charge batteries in a hazardous environment.

⚠ DANGER **Risk of electric shock. Connect the charger power cord to an outlet that is correctly installed and connected to an electrical ground according to all codes and regulations. A grounded outlet is necessary to decrease the risk of electric shock – do not use ground adapters or replace the plug. Do not touch parts of output connector or battery terminals that do not have insulation.**

Disconnect the AC plug before you make or break the connections to a battery that is charging. Do not open or disassemble the charger. Do not operate the charger if the AC cord is damaged. Make sure qualified personnel does all repair work to the charger.

⚠ WARNING **To prevent over-heating that can cause damage to the charger and possible fire, keep the air fins clear.**

The power AC cord has a plug with a ground post. Do not remove, cut, or bend the ground post.

The off board or portable charger must have a dedicated 15 amp AC circuit, refer to the charger manual for appropriate circuit protection. The charger should be placed in an area that permits good air flow around and under the charger Read and follow the operation instructions supplied by the manufacturer with the charger. Before charging the batteries, park the vehicle in a well ventilated area, engage the parking brake, turn the key switch to the OFF position, and remove the key. Connect the AC cord to a dedicated 15 amp AC outlet to activate the charger. Plug the charger cord into the charge receptacle on the vehicle. Unplug and properly store the cord when the charging cycle is complete.

PERFORMANCE FEATURES

NOTICE: The speed of the motor is sensed and controlled by the controller.

Speed Control

⚠ WARNING **The speed control system is not an alternative for the brake. Use the brake to control speed and decrease the risk of injury.**

Speed control system vehicles are equipped with a regenerative motor control system.

Example: If all of the following events occur:

- the vehicle is being driven down a slope
- the vehicle attempts to exceed the specified top speed with the accelerator pedal pressed **or** released

the regenerative brake will limit the speed of the vehicle to the specified top speed but the warning beeper will **not** activate. When the regenerative braking system is activated by this sequence of occurrences, the motor generates power which is returned to the batteries.

If the operator tries to override the electronic brake feature by moving the direction selector or key switch to another position the vehicle will brake **quickly** until it reaches approximately 2 mph (3 kph).

Pedal-Up Braking

Pedal-up braking is regenerative braking that occurs when the accelerator pedal is released while the vehicle is moving.

Example: If all of the following events occur:

- the vehicle is being driven down a slope
- the accelerator pedal is released

the pedal-up braking decreases speed until the vehicle stops or the accelerator pedal is applied. The warning beeper will **not** activate. When pedal-up braking is activated by this sequence of occurrences, the motor generates power which is returned to the batteries.

Walk-Away Feature

Walk-Away limits vehicle movement without driver input, decreases vehicle speed to 2 mph (3 kph) and activates an alarm.

Example: If all of the following events occur:

- the vehicle is stopped for more than 2 seconds
- the accelerator pedal is released for more than one second
- the vehicle starts to move at more than 2 mph (3 kph)

the Walk-Away feature limits speed to approximately 2 mph (3 kph) and the warning beeper activates. When the accelerator pedal is pressed, the Walk-Away feature and warning beeper stops and normal vehicle operation continues.

Anti-Roll Back Feature

Anti-Roll Back, like Walk-Away, limits reverse motion of the vehicle down a slope to less than 2 mph (3 kph). See Walk-Away Feature for more information. An alarm will not be activated should the anti-roll back feature engage.

Anti-Stall Feature

Anti-Stall protection prevents motor damage if the vehicle is stalled against an object or on a hill.

Example: If all of the following events occur:

- the system senses that the accelerator pedal is pressed (power applied to motor)
- the motor is stopped long enough that additional time can cause damage to the motor

the Anti-Stall feature will interrupt power to the motor. To restore power to the motor, turn the key to the OFF position for 5 seconds and return the key switch to the N (neutral) position before driving/ continuing operation.

High Pedal Disable Feature

High Pedal Disable prevents acceleration of the vehicle if the direction selector is changed or the key is turned on while the accelerator is pressed.

Diagnostic Mode Feature

Diagnostic mode helps with troubleshooting.

With some electrical system failures, the Diagnostic Mode feature defaults to a mode that allows the vehicle to operate at a decreased speed.

This feature allows you to return the vehicle to the storage facility and identify the problem.

STARTING AND STOPPING THE VEHICLE

WARNING **Unintentional roll-back of the vehicle could cause severe personal injury or vehicle damage. To reduce the possibility of vehicle roll-back, keep the brake fully pressed until the motor has started.**

Remove the charger plug from the receptacle and correctly store the cord before you move the vehicle.

1. Sit in the driver's seat.
2. Press and hold the brake pedal.
3. Insert the key and turn to the desired direction.

NOTICE: When the direction selector is moved to the reverse position, a warning alarm will activate to indicate that the vehicle is ready to run in reverse.

4. Slowly press the accelerator pedal to start the motor.
5. When the accelerator pedal is released, the motor decreases the speed of the vehicle. To stop the vehicle more quickly, press the brake pedal.
6. Engage the parking brake, turn the key to OFF and remove the key from the switch before exiting the vehicle.

Starting on a Hill

WARNING **Unintentional roll-back of the vehicle could cause severe personal injury or vehicle damage. To reduce the possibility of vehicle roll-back, keep the brake fully pressed until the motor has started.**

CAUTION **Do not use the accelerator and motor to hold the vehicle on a hill. Doing so for more than 3 - 4 seconds will cause permanent damage to motor.**

To decrease the risk of permanent damage to the drive system, do not allow roll-back when you start the vehicle on a hill.

1. Press the brake pedal with your left foot when releasing the parking brake. Keep pressure on the pedal to prevent the vehicle from rolling back.
2. Press the accelerator pedal with your right foot as you release the brake pedal.
3. Press the accelerator pedal with gradual and steady pressure until the vehicle reaches the desired speed.

ACCELERATING

WARNING **Accidental movement of the accelerator pedal can cause the vehicle to suddenly move and cause severe injury or death.**

Make sure the key is in the OFF position and the parking brake is engaged any time the vehicle is parked.

1. Release the parking brake.
2. Move the key switch to the desired direction.
3. Apply slow, steady pressure to the accelerator pedal to increase vehicle speed. When you release the accelerator pedal, the motor decreases the speed of the vehicle.

NOTICE: If the key switch is in the F, N, or R position and the parking brake is engaged, the brake releases when you press the accelerator pedal and can cause the vehicle to move suddenly. This is a feature to make sure the vehicle is not driven with the parking brake engaged. Pressing the accelerator pedal is not the recommended method to release the parking brake.

BRAKING

WARNING **The weight of the load will increase the braking distance required to slow or stop the vehicle. Not allowing for increased braking distance under load can cause an accident or injury.**

1. Release the accelerator pedal completely.
2. Press the brake pedal to slow vehicle speed or stop the vehicle completely.
3. Practice slowing and stopping using the brake to become familiar with the controls.

Coasting

WARNING **Do not allow the vehicle to coast at above recommended speeds. Control vehicle speed with the brake.**

The vehicle has a braking feature (pedal-up) that decreases the speed when the accelerator pedal is released. The feature continues to decrease the speed until the vehicle stops. Press the brake if you need to decrease speed or stop the vehicle quickly.

DRIVING WITH PASSENGERS

WARNING **Always fill the front seats to capacity prior to seating any passengers on the rear flip seat.**

- All passengers must be at least 59 in. (150 cm) tall. Passengers must be able to sit with their back against the seat and both feet on the floor.
- Do not allow more than five passengers in the vehicle.
- Do not allow a passenger to ride anywhere on the vehicle except the passenger seat.
- Travel at speeds appropriate for your skills, your passenger's skills, and the operating conditions. Avoid unexpected or aggressive maneuvers that could cause discomfort or injury to the passenger.
- Handling characteristics can change with the added weight of a passenger. Allow more time and distance for braking.

SLIPPERY SURFACES

WARNING **Skidding or sliding can cause loss of control. Skidding or sliding can cause rollover if tires have lost traction, then regain traction suddenly. When operating on slippery surfaces, travel at reduced speed to help maintain control of the vehicle.**

When operating in conditions such as ice, water, muddy trails, loose gravel or freezing temperatures, follow these guidelines:

- Do not operate on excessively rough, slippery or loose terrain.
- Slow down before entering potentially slippery areas.
- Maintain a high level of alertness, carefully evaluate the path of travel and avoid quick, sharp turns.
- Correct a skid by turning the steering wheel in the direction of the skid. *Never apply the brakes during a skid.*

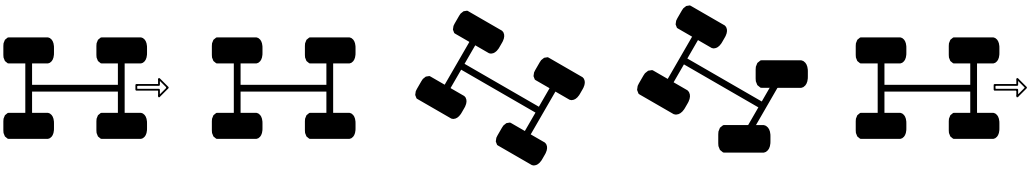

DRIVING UPHILL

When driving up a hill, follow these guidelines:

- Drive straight up the hill.
- Avoid excessively steep hills.
- Keep both feet on the floor or pedals.
- Check the terrain before driving up a hill. Do not try to climb hills that have excessively slippery or loose surfaces.
- Drive at a steady rate of acceleration and speed.
- Do not drive over the crest of a hill at high speed. An obstacle, sharp drop, or another person or vehicle could be on the other side of the hill.
- Do not attempt to drive up a hill that is beyond your skill level.

TRAVERSING HILLSIDES

Traversing a hillside is not recommended. Improper procedure can cause loss of control or a rollover. Avoid crossing the side of a hill unless absolutely necessary. If traversing a hillside is unavoidable, check the terrain and determine if it can be accomplished safely. Do not proceed if the terrain is beyond the vehicle or driver's ability.

If traversing a hillside is unavoidable, follow these guidelines:

- Drive slowly.
- Use extreme caution.
- Avoid crossing the side of a hill that has a slippery surface.
- Avoid crossing the side of a steep hill.
- When traversing a hillside that has soft terrain, it may be necessary to steer slightly uphill to keep the vehicle traveling in a straight line.
- If you feel that you are losing control of the vehicle, steer downhill if possible to regain control.

DRIVING DOWNHILL

WARNING **The weight of the load will increase the braking distance required to slow or stop the vehicle. Not allowing for increased braking distance under load can cause an accident or injury.**

When driving down a hill, follow these guidelines:

- Avoid excessively steep hills.
- Check the terrain carefully before descending any hill.
- Never drive down hills with excessively slippery or loose surfaces.
- Drive slowly.
- Drive straight down the hill. Avoid descending the hill at an angle that could cause the vehicle to lean sharply to one side.
- Apply light and constant pressure to the brakes to maintain slow speed and control of the vehicle.

STALLING ON A HILL

A rollover can result from stalling or rolling backward while climbing a hill. Drive uphill at a constant speed.

If your vehicle completely stalls while climbing a hill:

1. Apply the brakes.
2. Verify that the area behind you is clear.
3. Put the direction selector in R (reverse).
4. Use steady brake pressure to control speed, and allow the vehicle to slowly roll straight downhill.

If your vehicle begins to roll downhill:

1. Do not press the accelerator.
2. Apply the brakes gradually until the vehicle fully stops.
3. Verify that the area behind you is clear.
4. Put the direction selector in R (reverse).
5. Use steady brake pressure to control speed, and allow the vehicle to slowly roll straight downhill.

DRIVING IN REVERSE

When driving in reverse, follow these guidelines:

- Check that the area behind the vehicle is clear of obstacles and people.
- Check left and right fields of vision before driving in reverse.
- Do not back down a steep hill.
- Drive in reverse slowly.
- Press the brakes lightly for stopping.
- Accelerate slow and steady.
- Avoid turning at sharp angles.

PARKING THE VEHICLE

NOTICE: Park the vehicle on a flat surface if possible. If parking on an incline is unavoidable, be sure to chock the to keep the vehicle from rolling.

1. Press the brake to stop the vehicle.
2. Engage the parking brake.
3. Turn the key switch to OFF.
4. Remove the key from the switch to prevent unauthorized use.
5. If parking on an incline, chock the wheels on the downhill end.

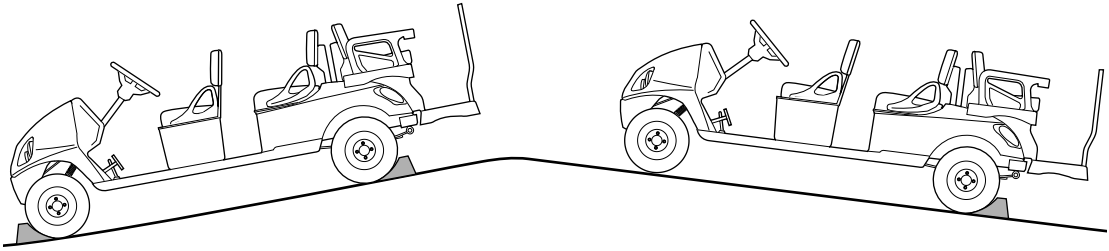

HAULING CARGO ON THE LOAD DECK

WARNING

Hauling cargo incorrectly can alter the vehicle handling characteristics and cause a loss of control, brake instability, and possibly lead to serious injury or death.

Never exceed the maximum weight capacity of the vehicle. The total load (operator, passenger, accessories, and cargo) must never exceed the maximum weight capacity of the vehicle. See the chart in *MAXIMUM LOAD DECK CAPACITY/MAXIMUM WEIGHT CAPACITY* on page 22.

Position the load as far forward, and as low as possible on the load deck.

Secure all loads before operating. Unsecured loads can shift and create unstable operating conditions.

Operating the vehicle with passengers on the load deck can result in severe injury or death. Never allow a passenger to ride on the load deck. Passengers must always ride seated in the passenger seat.

Drive slowly and carefully.

Operate only with stable and safely arranged loads. When handling loads that are impossible to center on the load deck, make sure the load is secured as tightly as possible and operate the vehicle with extra caution.

Reduce speed and allow greater distances for braking when hauling cargo.

Heavy loads affect braking and handling characteristics. Use extra caution when applying brakes with a heavily loaded vehicle. Avoid terrain or situations that may require reverse downhill travel.

Use extra caution when operating with loads that extend over the load deck sides. Stability and maneuverability can be affected and increase the risk of a rollover.

This vehicle is designed to carry specific capacities. Read and comply with the load distribution warnings on the warning label affixed to the load deck. The total load (operator, passenger, accessories, and cargo) must never exceed the maximum weight capacity of the vehicle.

MAXIMUM LOAD DECK CAPACITY/MAXIMUM WEIGHT CAPACITY

WARNING **Exceeding the weight capacities can cause the loss of vehicle control and possible injury or death.**

Always fill the front seat to capacity prior to seating any passengers on the rear seat.

Maximum Vehicle Weight Capacity	1200 lbs. (544 kg)
Maximum Load Deck Capacity	300 lbs. (136 kg)

- Do not exceed the maximum load deck capacity.
- Do not exceed the maximum vehicle weight capacity (includes weight of operator, passenger, cargo, and accessories).
- Always fill the front seat to capacity prior to seating any passengers on the rear seat.

FLIP SEAT/ LOAD DECK OPERATION

The rear facing seat is 2-person maximum. The seat pivots to form a load deck.

WARNING **Never fill a gas container on the load deck. Static discharge can ignite gasoline vapor and cause an explosion.**

Always put the gasoline container on the ground before filling. Never fill a gasoline container on the load deck. Static electricity is built up during the fueling process and can discharge and cause the gasoline vapor to ignite.

WARNING **Never allow more than two passengers on the rear facing seat. Never leave small children alone on the seat. Keep both arms and legs inside the vehicle boundary at all times.**

To change the flip seat from passenger seating to a load deck follow the steps below:

- Remove any items from the seat.
- Rotate the seat back and seat bottom toward the rear of the vehicle. The seat bottom board will rest in the two side frame pieces.

WARNING **To reduce the possibility of severe injury or death DO NOT carry passengers on the load deck.**

To change the flip seat from a load deck to passenger seating follow the steps below:

- Remove any cargo from the load deck.
- Rotate the seat back and seat bottom toward the front of the vehicle.

VEHICLE MAINTENANCE

MAINTENANCE SAFETY

WARNING **To prevent serious injury or death, follow the procedures and comply with the safety information in this manual while performing vehicle service or maintenance.**

Use the tools shown in the tool list and wear the specified safety equipment when performing vehicle service or maintenance.

Remove all jewelry before you service the vehicle.

Do not allow loose clothing or hair to contact the moving parts.

Do not touch hot objects.

Make sure that the key switch is in the OFF position and the key is removed before servicing the vehicle.

Disconnect the negative battery terminal before servicing the vehicle to prevent accidental operation.

The drive wheels must be lifted and supported on jack stands before performing any service to the powertrain when the motor is in operation.

Chock the wheels and support the vehicle with jack stands. NEVER get under a vehicle that is supported by a jack. Lift the vehicle according to the manufacturers instructions.

Wear a face shield when working around the battery pack.

Be careful when working around batteries, using solvents or compressed air.

Use insulated tools within the battery area to prevent sparks or battery explosion.

The electrolyte in a battery is an acid solution which can cause burns to the skin and eyes. Completely clean all electrolyte spills that contact the skin or eyes with clear water. Contact a physician immediately.

Neutralize electrolyte spills with a solution of 2 teaspoons (10 ml) of sodium bicarbonate (baking soda) mixed in 1 quart (1 L) of water. Rinse with clean water.

To prevent the risk of battery explosion, keep all flammable materials, open flames or sparks away from the battery.

Maintain constant awareness that some components are heavy, spring loaded, corrosive, explosive, can cause high amperage or get extremely hot. Battery acid and hydrogen gas can cause bodily injury

After you make repairs or do maintenance, test the vehicle in a safe area that is free from vehicle and pedestrian traffic.

NOTICE: To decrease the risk of damage to the controller or motor, move the run/tow switch to the TOW position before you tow the vehicle.

After you connect a battery or any other wires, wait a minimum of 30 seconds before turning the key switch to the ON position.

To decrease the risk of engine damage, do not operate the vehicle at full throttle for more than 5 seconds if the drive wheels are lifted off the ground.

SCHEDULED MAINTENANCE

Consistent inspection, adjustment, and lubrication of some components are necessary to maintain the *vehicle* so that it remains in safe and reliable condition. Refer to the *SCHEDULED MAINTENANCE CHART* on page 24 for detailed requirements.

Inspect, clean, lubricate, adjust, and replace parts as necessary. Use manufacturer or equivalent replacement parts.

Record the maintenance items performed along with details in the *SCHEDULED MAINTENANCE* beginning on page 43.

NOTICE: Service and adjustments are important for safe and reliable vehicle operation. If not familiar with safe service and adjustment procedures, have a certified dealer perform the operations.

Severe Use Conditions

Vehicles subjected to heavy or severe use must be inspected and serviced more frequently than those of normal use patterns.The following conditions are considered severe use:

- frequent or prolonged use in a dusty environment
- prolonged low speed operation
- prolonged heavy load operation
- frequent use in mud, water or sand
- short trips in cold weather

SCHEDULED MAINTENANCE CHART

Perform all services at the maintenance interval reached first.

S – Indicates operations that need to be performed on vehicles subjected to severe use.

Item		Interval (perform at interval that comes first)		Remarks	Page
		Hours	**Calendar**		
	Overall vehicle condition	Pre-ride		Inspect.	
	Batteries	Pre-ride		Check state of charge, battery condition, loose terminals, corrosion, hold down and hardware.	
	Steering	Pre-ride		Check for smooth and free operation.	
	Front suspension	Pre-ride		Inspect. Check for leaks and loose or missing hardware.	
	Rear suspension	Pre-ride		Inspect. Check for leaks and loose or missing hardware.	
	Tires	Pre-ride		Check condition and pressure.	28
	Wheel lug nuts	Pre-ride		Check for loose or missing.	28
	Accelerator	Pre-ride		Check for smooth operation.	
	Brake system	Pre-ride		Check for smooth operation and acceptable stopping distance.	31
	Frame hardware	Pre-ride		Check for loose or missing.	
	Headlights and taillights	Pre-ride		Check operation. Replace bulbs as needed.	29
	Reverse warning alarm	Pre-ride		Check operation.	
	Switches	Pre-ride		Check operation.	
	Fluid leakages	Pre-ride		Inspect entire vehicle for leaks	
S	Brake shoes	10	Monthly	Inspect. Replace as needed.	
	Batteries	20	Monthly	Clean	
	Batteries	20	Monthly	Check electrolyte level; fill with distilled water if required	
	Charger receptacle	20	Monthly	Clean connections.	
	Parking brake	20	Monthly	Conduct brake performance test; adjust as necessary. Check for correct hold on an incline.	
	Accelerator	20	Monthly	Check for smooth operation.	
	Wiring	20	Monthly	Inspect for loose connections, broken or missing insulation.	
	Steering	20	Monthly	Check for excess play, loose or missing hardware.	

Item		Interval (perform at interval that comes first)		Remarks	Page
		Hours	Calendar		
S	Tie rods	20	Monthly	Check for excess play, bent rods, loose or missing hardware.	
	Front suspension	20	Monthly	Inspect strut for leaks. Check hubs and kingpins, for excessive play, worn bushings, loose or missing hardware.	
	Rear axle	20	Monthly	Check for leakage; add oil as required.	
	Brakes	20	Monthly	Check for smooth operation and acceptable stopping distance.	31
	Front wheel alignment	60	3 Months	Check for unusual tire wear.	
	Rear Suspension	60	3 Months	Check for shock oil leakage, worn bushings, loose or missing hardware.	
S	General lubrication	50	3 Months	Lubricate all fittings, pivots, cables, etc. where required.	25
	Rear axle	500	5 years	Replace fluid.	
	Motor coupling	20,000 Amp Hours	5 years	Add anti-seize compound (approx. 1 tbsp.)	

RECOMMENDED LUBRICANTS AND FLUIDS

Check and lubricate all components at the intervals shown in the *SCHEDULED MAINTENANCE CHART* on page 24.

Item	Capacity	Lubricants/Fluids	Notes
Rear axle oil	25 oz. (0.7 L)	Mobil 424	Part Number 603967
Rear axle oil	2.0 oz (59 ml)	Friction Modifier E-Z-GO	Part Number 611242
Grease fittings		Universal joint grease or equivalent	Do not exceed 3 pumps of grease in each fitting.

REPLACEMENT OF MAINTENANCE ITEMS

These items or their equivalents can be purchased through an authorized dealer, directly from the manufacturer or any other qualified source.

Item	Part Number
58V, 10A Mini Fuse	636455G22
32V, 15A Mini Fuse	636455G13
32V, 5A Mini Fuse	636455G10
32V, 10A Mini Fuse	636455G12
12V, 20A Relay	643691
Headlight Bulb	619100
Taillight Bulb	10023553

LIFTING THE VEHICLE

WARNING **Read and comply with all of the following warnings and lifting procedures to prevent the possibility of the vehicle falling and causing serious injury or death.**

For some maintenance procedures, it is necessary to lift the vehicle. Comply with the following warnings and follow the lifting procedure to ensure the safety of you, your vehicle and surroundings.

WARNING

The vehicle must be on a firm and level surface for lifting.

Remain constantly aware that the vehicle is not stable during the lifting process.

Place the jack and jack stands only in the areas indicated in the following illustration.

Do not get under a vehicle until it's stability on the jack stands is verified; never get under a vehicle while it is on a jack alone.

Put wheel chocks in front and behind all wheels that are not being lifted.

Do not allow anyone to remain or get on the vehicle at any time during the lifting process or when the vehicle is lifted.

When performing any service to the drive train, lift the drive wheels off the ground.

Tools

- jack
- jack stands (4)
- wheel chocks

Lifting Front

1. Chock the rear wheels to keep the vehicle from rolling backward.
2. Put a jack under the center of the front axle.
3. Raise the vehicle with the jack.
4. Install jack stands under the front frame cross member as shown.
5. Lower the vehicle until it rests on the jack stands.
6. Remove the jack.
7. Confirm that the vehicle is stable on the jack stands before proceeding with any service.

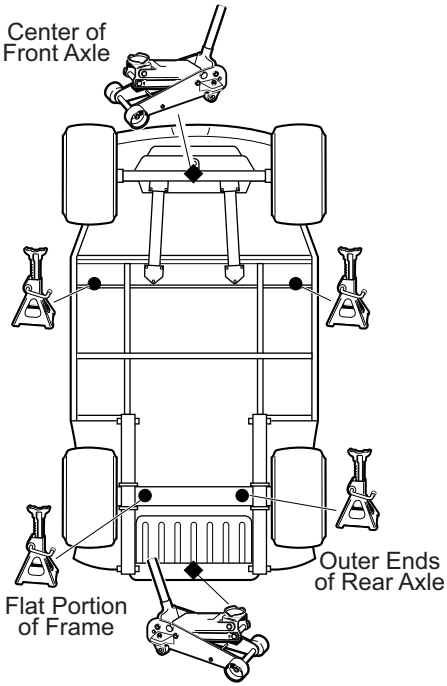

Lifting Rear

1. Chock the front wheels to keep the vehicle from rolling forward.
2. Put a jack under the center of the rear frame cross member.
3. Raise the vehicle with the jack.
4. Install jack stands under each end of the rear axle.
5. Lower the vehicle until it rests on the jack stands.
6. Remove the jack.
7. Confirm that the vehicle is stable on the jack stands before proceeding with any service.

Lowering Vehicle

1. Make sure chocks are still in place on any wheels that remain on the ground.
2. Put the jack in the same location that was used to raise the vehicle.
3. Raise the vehicle enough to remove the jack stands. Remove the jack stands from underneath the vehicle.
4. Slowly lower the vehicle to the ground and remove the jack.

VEHICLE CLEANING AND CARE

Keeping your vehicle clean is not only beneficial to its appearance, but can also help extend the life of various components.

Washing the Vehicle

NOTICE: Do not use a pressure washer to wash the vehicle. High water pressure can damage components. Some products, including insect repellents and chemicals, will damage plastic surfaces. Do not allow these types of products to contact the vehicle.

- Do not use a pressure washer to clean the vehicle.
- Use an automotive type cleaner or mild soap to wash the vehicle. Harsh cleaners can scratch the finish.
- Use clean or new cloths and pads for washing. Reused cloths and pads can contain dirt particles that will scratch the finish.
- Inspect all grease fittings for dirt intrusion or lack of grease after washing. Apply grease as required to maintain proper function.
- Use a sponge or soft brush and a soap/water solution to clean the vinyl seats. Rinse with clean water.
- Use an automotive type wash cloth to wash the body of the vehicle. To prevent the soap from drying on the vehicle, rinse with clean water frequently.
- Clean the windshield with water and a clean cloth. Remove small scratches with a plastic polish.
- Clean the bottom of the vehicle where mud or dirt can collect. Loosen any packed sediment to help with removal. Be careful not to damage the paint.
- Dry the vehicle with a chamois before the water dries to prevent water spots.

Polishing the Vehicle

- Do not use medium to heavy duty compounds on the finish. Use wax that is for clear coat automotive finishes only. Do not apply wax or polish to matte finish surfaces.
- Use clean or new cloths and pads for polishing. Old or reused cloths and pads can contain dirt particles that will scratch the finish.

TIRES

Follow the tire maintenance procedures as instructed in this manual and on the labels on the vehicle.

Always use the approved size and type of replacement tires. See *VALOR 6* on page 41 for the proper tire type and size.

WARNING

Worn, improperly inflated, improper sized, or incorrectly installed tires will affect vehicle handling and could cause an accident resulting in severe injury or death.

Inflate all tires to the same pressure. Operating with unequal or incorrect pressure can adversely affect steering and handling and could cause an accident resulting in severe injury or death.

To decrease the risk of tire explosion, do not exceed the tire inflation rating on the tire sidewall. Make sure the tires are properly inflated at all times of operation. See *Tire Pressure* on page 28.

To decrease the risk of tire explosion, inflate small amounts of air into the tire at intervals to allow the bead to seat properly. Because of the low volume of the small tires, over inflation can occur in seconds. Never exceed the tire inflation pressure rating on the tire sidewall when seating a bead. Protect your face and eyes when you remove a valve core.

When you remove the wheels, use only sockets made for impact wrenches to decrease the risk of injury by a broken socket.

Do not use tires with a low rated pressure. Do not use tires that have a recommended tire inflation pressure less than the tire inflation pressure recommended in the owner's manual.

Do not over inflate the tires. Excess pressure can cause the tire to separate from the wheel or cause a tire explosion.

Tire Pressure

Maintaining correct tire inflation pressure is essential for safe vehicle operation. You can vary the inflation pressure, within the recommended range to suit the condition of the terrain.

TIRE PRESSURE RANGE	TERRAIN CONDITIONS	RECOMMENDATION
18 - 22 psi (124 - 152 kPa)	hard surfaces or pavement	Inflate to higher pressure within the range; never exceed maximum pressure indicated.
	soft terrain or turf	Inflate to lower pressure within the range to reduce potential damage to the terrain or turf.

Tire Repair

Tools

- lug wrench, 3/4”
- impact wrench
- impact socket, 3/4”
- torque wrench, ft.lbs.

NOTICE: Tire plug tools and plugs are available at automotive outlets. The tire does not have to be removed from the wheel to install the tire plug.

Use a tire plug to repair small holes in the tread part of the tire. For large holes or holes/cuts in the tire sidewall, the tire must be replaced.

1. Remove the wheel from the vehicle. See *Wheel Removal* on page 29
2. Locate the leak in the tire.
   a. If the tire is very low or flat, fully inflate the tire.
   b. Brush soapy water over the surface of the tire. Air bubbles will be visible where the air is leaking from the tire.
   c. Mark the hole with chalk.
3. Install the plug according to the manufacturer’s instructions.
4. Install the wheel on the vehicle. See *Wheel Installation* on page 29.
5. Fully inflate the tire.

Tire Replacement

Tire replacement requires a tire mounting machine, and must be done by a qualified tire center or an authorized dealer.

WHEELS

WARNING **Worn, improperly inflated, improper sized, or incorrectly installed tires will affect vehicle handling and could cause an accident resulting in severe injury or death.**

The wheel spacers and wheel bolts provided must not be modified in any manner. Assemble per instructions. CONFIRM ADAPTERS OR SPACERS ARE SITTING FLUSH AFTER ASSEMBLY AND PROPERLY TORQUE WHEEL BOLTS AND LUGS. Not properly torquing or inspecting could result in vibration, wheel loss, serious injury or death.

CAUTION **To decrease the risk of component damage, do not tighten the lug nuts to more than the torque specified below.**

Check the lug nuts for tightness at the intervals indicated in the *SCHEDULED MAINTENANCE CHART* on page 24.

Wheel Removal

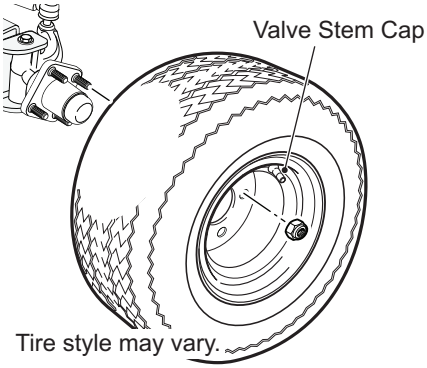

Tools

- lug wrench, 3/4”
- impact wrench
- impact socket, 3/4”
- torque wrench, ft.lbs.

1. Lift the vehicle. See *LIFTING THE VEHICLE* on page 26.
2. Remove the lug nuts.
3. Remove the tire from the vehicle.

Wheel Installation

Lug Nut Torque	65 - 85 ft.lbs. (88 - 115 Nm)

NOTICE: To decrease the risk of component damage, do not tighten the lug nuts to more than the specified torque.

NOTICE: Always install lug nuts using a cross sequence pattern to ensure the even seating of the wheel against the hub.

Lug Nut Tightening Pattern

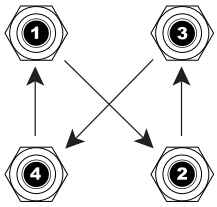

1. Install the wheel on the hub with lug nuts. Make sure the valve stem is to the outside.
2. Finger tighten the lug nuts.
3. Using the cross tightening pattern shown to the right, tighten the lug nuts to *65 - 85 ft.lbs. (88 - 115 Nm)*. Tighten in increments of 20 ft. lbs. (27 Nm).

LIGHTS

- Clean the lights frequently to maximize visibility.
- Replace burned out bulbs promptly.

⚠ CAUTION **Do not operate this vehicle at night or in low light if any bulbs are burned out. Poor lighting reduces visibility that could cause an accident resulting in severe injury or death.**

NOTICE: Replacement bulbs are available from your dealer or directly from the manufacturer.

Halogen Headlight Bulb Replacement

⚠ CAUTION **Light components can get hot if they have been in operation. Allow the lights to cool before servicing to prevent burns to the skin.**

NOTICE: Do not touch a halogen bulb with bare fingers. Oil from skin leaves a residue that causes a hot spot and will diminish the life of the bulb.

1. Disconnect the headlight harness from the headlight.
2. Rotate the bulb 1/4-turn to remove the headlight bulb from the housing.
3. Insert and rotate the new bulb to lock into place.
4. Connect the harness to the bulb.

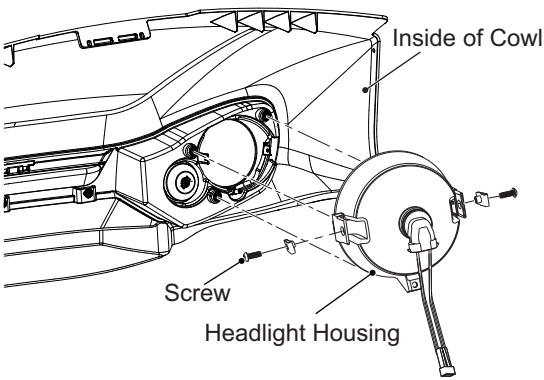

Brake Light

The taillights are LED and do not require replacement. Use the following procedure if the taillight is damaged and does require replacement:

1. Remove three screws (1) that secure the taillight to the bezel (2, 3) and remove the taillight (4)
2. Install the new taillight and secure the taillight using three screws (1).
3. Tighten hardware to the torque value shown below.

Item	Torque Specification
1	5 - 10 in. lb (0.6 - 1.1 Nm)

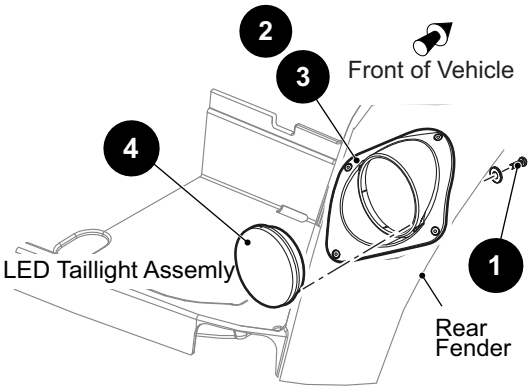

FUSE REPLACEMENT

NOTICE: Have the vehicle inspected by your dealer if fuses continue to blow after they have been replaced.

1. Lift the seat bottom to access the PDM.
2. Open the PDM to access the fuses.
3. Remove the old fuse and replace with a new fuse of the same type and size.
4. Fuses are available from your dealer or directly from the manufacturer.

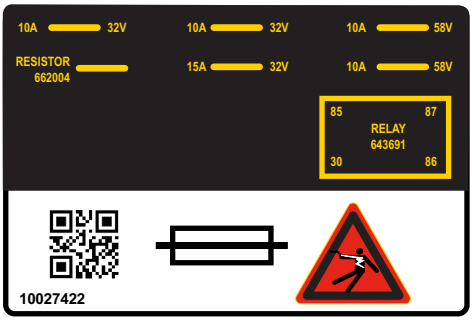

CONTROLLER SYSTEM TEST

At monthly intervals, test the controller by allowing the vehicle to roll down an incline with the accelerator pedal released. Braking force should be felt at approximately 2 mph (3 kph) indicating that the system is functioning. If vehicle speed continues to rise, apply the brake and have vehicle inspected by a trained mechanic.

REAR AXLE

The only maintenance necessary for the first five years is the inspection of the rear axle for lubricant leakage. Unless leakage is visible, the lubricant needs to be replaced after five years. Refer to the Service Manual for the fluid replacement procedure.

Change the axle oil at the intervals indicated in the *SCHEDULED MAINTENANCE CHART* on page 24.

Checking the Lubricant Level

Clean the area around the check/fill plug and remove the plug. The correct lubricant level is just below the bottom of the threaded hole. If lubricant is low, add lubricant as required. Add lubricant slowly until lubricant starts to seep from the hole. Install the check/fill plug. In the event that the lubricant is to be replaced, the oil pan must be removed or the oil siphoned through the check/fill hole.

LUBRICATION

CAUTION **Do not use more than three pumps of grease in a grease fitting at any one time. Excess grease can cause grease seals to fail, or allow grease into areas that could damage components.**

Pumping more than three pumps of grease in a grease fitting could damage grease seals and cause premature bearing failure.

Lubricate components at the intervals indicated in the *SCHEDULED MAINTENANCE CHART* on page 24.

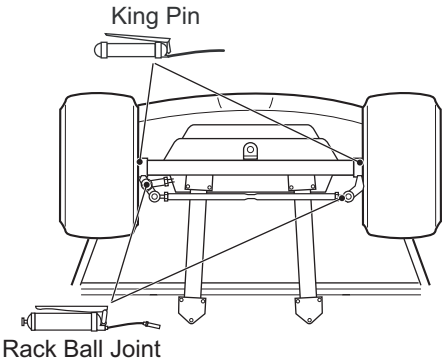

View from Underside of Vehicle

BRAKES

WARNING **Always inspect the pedal travel before operating a vehicle to confirm some brake function is present.**

All driving brake tests must be done in a safe location with regard for the safety of all personnel.

NOTICE: Over time, a subtle loss of performance may take place. It is, therefore, important to establish the standard with a new vehicle.

Test and service the brake system at the intervals indicated in the *SCHEDULED MAINTENANCE CHART* on page 24.

Periodic Brake Test

The *Periodic Brake Test* must be performed initially and regularly as an evaluation of your vehicle's brake system performance. It is a method of identifying a subtle loss of braking performance over time.

Establish the 'acceptable stopping distance' when your vehicle is new and the brakes are at their peak of performance. As your vehicle is used, a subtle loss of braking performance may be detected, so it is important to establish the standard with a new vehicle.

Actual stopping distances are influenced by weather conditions, terrain, road surface condition, vehicle weight and speed. No specific braking distance can be reliably specified, so it is important to establish a base to test with.

The test is conducted by engaging the park brake instead of the brake pedal to eliminate different pedal pressures, to include affects of linkage misadjustment and provide a more accurate test.

NOTICE: You must have enough space to accelerate to maximum speed before engaging the parking brake. Use a marker to indicate the predetermined line to engage the parking brake that you will use for the performance test.

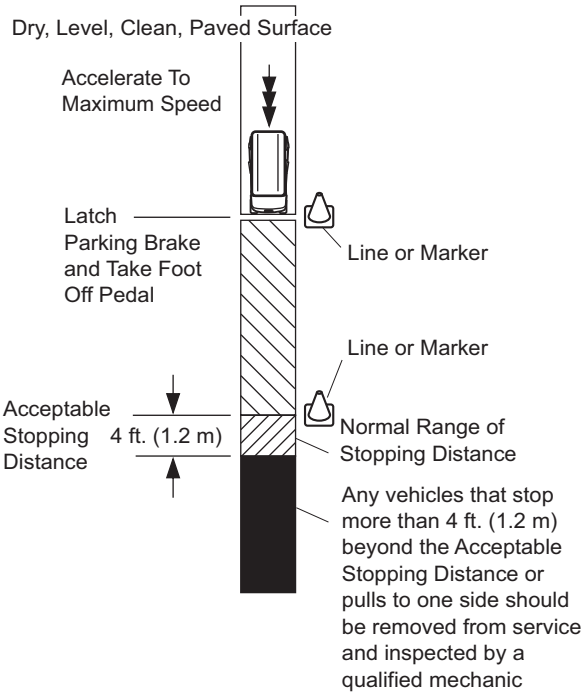

1. On a dry, level, clean, paved surface, accelerate the vehicle to maximum speed.
2. Engage the parking brake at the predetermined and marked line.
3. Mark the line where the vehicle comes to a complete stop.
4. If the vehicle stops in a significantly greater distance than the established distance in future tests, or pulls to one side, it should be tested again.
5. If the vehicle fails the second test, discontinue use until it can be inspected and determined safe for operation by a qualified mechanic.

BATTERIES

A battery is described as two dissimilar metals immersed in an acid. If the acid is absent or if the metals are not dissimilar, a battery has not been created. The batteries in this vehicle are lead acid.

A battery does not store electricity, but it can produce electricity as the result of a chemical reaction which releases stored chemical energy in the form of electrical energy. The chemical reaction occurs faster in warm conditions and slower in cold conditions. Temperature is important when conducting tests on a battery and test results must be corrected to adjust for temperature differences.

An older battery can perform adequately except that its capacity is decreased. Capacity describes the time that a battery can continue to supply its design amperes from a full charge.

A battery has a maximum life. Good maintenance maximizes the available life and decreases the conditions that can reduce the life of the battery.

⚠ WARNING

Use insulated wrenches to prevent direct contact of a wrench with the battery terminals. Direct contact of a bare wrench with battery terminals can cause an explosion resulting in severe injury or death.

To prevent the risk of battery explosion, keep all flammable materials, open flames or sparks away from the batteries.

Hydrogen gas is made as batteries are charged. Do not charge batteries without good ventilation. A 4% concentration of hydrogen gas is explosive.

Make sure that the key switch is in the OFF position and all electrical accessories are off before you start to work on the vehicle.

Be careful when you use aerosol containers near the battery terminals. Use a container with insulation to prevent an explosion.

Turn off all accessories before disconnecting from the battery terminal.

Always wear a safety shield or approved safety goggles when you add water or charge the batteries.

⚠ CAUTION

The electrolyte in a battery is an acid solution which can cause burns to the skin and eyes. Completely clean all electrolyte spills that contact the body and eyes with clear water. Contact a physician immediately.

Do not tilt the batteries during removal or installation. An electrolyte spill can cause burns and damage.

Neutralize electrolyte spills with a solution of 2 teaspoons (10 ml) sodium bicarbonate (baking soda) mixed in 1 quart (1 liter) of water. Clean with water.

Use safe procedures to move the batteries. Always lift the battery with a commercially available battery lifting device.

NOTICE: If you fill the batteries with electrolyte above the maximum level, you can cause an electrolyte spill during the charge cycle. An electrolyte spill can cause damage to the vehicle and storage facility.

BATTERY DISPOSAL

Return used batteries to the manufacturer or lead smelter for recycling purposes. For neutralized spills, put residue in acid-resistant containers with an absorbent material such as sand. Dispose in accordance with state and federal regulations for acid and lead compounds. Contact authorized environmental agencies for information about disposal.

BATTERY CLEANING

Clean the batteries according to the Periodic Service Schedule.

⚠ CAUTION

Always wear eye protection when cleaning the battery.

To prevent battery damage, make sure you correctly install all battery caps.

NOTICE: To decrease the risk of damage to vehicle or floor, neutralize acid before you spray the battery with water. To decrease the risk of damage to electrical components surrounding the battery while cleaning, do not use a pressure washer.When you clean the battery cases and terminals, do not use a water hose without neutralizing any acid deposits first. The water hose moves the acid from the top of the batteries to another area of the vehicle or storage facility, where it can cause damage. After

spraying the batteries, a conductive residue remains on the batteries and contribute to the discharge of the batteries.

1. Remove corrosion with a wire brush.
2. Wash top and sides of the batteries with a solution of:
   - 2 tsp. (10 ml) baking soda
   - 1 quart (1 liter) water
3. Wash all metal components near the battery.
4. Allow the solution to set a minimum of three minutes. Use a soft bristle brush or cloth to clean the top of each battery to remove residue that can cause the discharge of the battery.
5. Rinse with tap water and dry with shop towels.
6. After the batteries are clean and dry, coat the terminals with a commercially available battery terminal spray.

BATTERY CHARGING AND MAINTENANCE

WARNING **Hydrogen gas is produced as batteries are charged. Charge batteries only in well-ventilated areas.**

Tools

- insulated wrench, 9/16”
- hydrometer
- battery protective spray
- battery carrier
- battery maintenance kit (P/N 25587-G01)

At Each Charging Cycle

- Before you charge the batteries, inspect the plug of the battery charger and vehicle receptacle housing for dirt or other particles.
- Charge the batteries after each use.

Monthly

- Inspect all wires for wear, loose connections, corrosion or damage of insulation.
- Make sure that the electrolyte level is correct and add clean water as required.
- Clean the batteries and wire connections.
- Apply battery protectorate to the battery terminals.

Electrolyte Level and Water

Maintaining correct electrolyte level is important because any part of the plates open to air will be damaged.

Do not overfill batteries with water. Too much water pushes the electrolyte from the battery by release of gas and a decrease in volume of the electrolyte.

The correct level of the electrolyte is 1/2” (13 mm) above the plates in each cell.

This level will leave approximately 1/4” - 3/8” (6 - 10 mm) of space between the electrolyte and the vent tube.

NOTICE: DO NOT overfill batteries. The charge cycle will expel electrolyte and cause component damage in overfilled batteries.

As a battery is being charged, it produces hydrogen gas. Most of this gassing occurs at the end of the charge cycle. Hydrogen gas is lighter than air. Water and sulphuric acid droplets will be carried out of the battery vents by the hydrogen gas, however, this loss is minimum. If the electrolyte level is high, the electrolyte will block the vent tube and the gas will push it out the vent tube and battery cap. The water will dry but the sulphuric acid will stay and damage the vehicle components and surface below the vehicle. Sulphuric acid loss will weaken the amount of acid within the electrolyte and decrease the life of the battery.

Correct Electrolyte Level

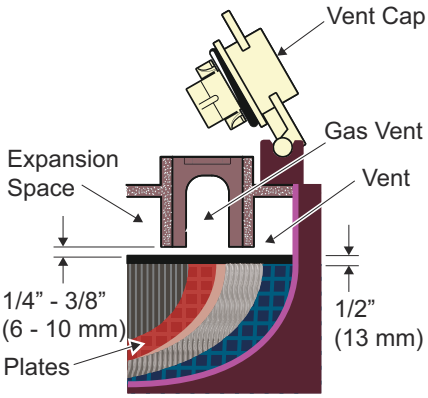

Electrolyte level should be at least 1/2” (13 mm) above the plates and 1/4” - 3/8” (6 - 10 mm) below vent.

Over the life of the battery, a large amount of water is used. The water added to the batteries must be clean and without contamination. Unclean water decreases the life of the battery by reducing the chemical reaction. Use distilled

water or filtered water only. Test water that is not distilled water and filter if needed. Refer to the following water purity table for requirements.

IMPURITY	PARTS PER MILLION
color	clear
suspended	trace
total solids	100
calcium and magnesium oxides	40
iron	5
ammonia	8
organic and volatile matter	50
nitrites	5
nitrates	10
chloride	5

WARNING **The electrolyte in a battery is an acid solution which can cause severe burns to the skin and eyes. Clean all electrolyte spills to the body and eyes with clear water. Contact a physician immediately.**

Always wear a safety shield or approved safety goggles when you add water or charge the batteries.

Hand held watering devices available at automotive parts stores, or automatic watering devices like the one included in the Battery Maintenance Kit (P/N 25587-G01) can be used with an approved water supply. These watering devices are accurate, easy to use and allow for fast fill. They also keep the correct electrolyte level within the battery cells.

NOTICE: The watering device should only be used if the electrolyte level is less than 1/2" (13 mm) above top of plates.

To clean an electrolyte spill, use a solution of:

- 2 tsp. (10 ml) baking soda
- 1 quart (1 liter) water

Wash all metal components near the battery.

Watering device similar to the type included in the Battery Maintenance Kit

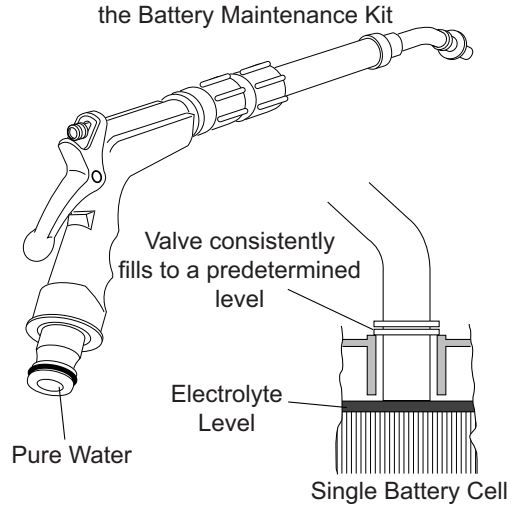

BATTERY REPLACEMENT

CAUTION **Before you disconnect or connect a battery or any other wires, turn the key switch to the OFF position.**

After you connect a battery or any other wires, wait a minimum of 30 seconds before you turn the key switch to the ON position.

1. Remove the battery hold downs and cables.
2. Remove the batteries with a commercially available lifting device.
3. If the batteries have been cleaned and the acid in the battery rack area is neutralized as recommended, no corrosion to the battery racks or surrounding area should be present. If any corrosion remains, remove it with a putty knife and a wire brush. Wash the area with a sodium bicarbonate (baking soda) and water solution, and then dry before primer and corrosion resistant paint is applied.
4. Put the batteries in the battery racks and tighten the hold downs to 45 - 55 in. lbs. (5 - 6 Nm) torque. The hold downs must be tight enough to prevent movement of the battery, but not tight enough to cause distortion of the battery cases.
5. Inspect all wires and terminals. Clean corrosion from the battery terminals or the wire terminals with a sodium bicarbonate (baking soda) and water solution and soft brush if needed.

WARNING **Be careful when using aerosol containers near battery terminals. Always use a container with insulation to prevent an explosion.**

6. Connect the battery wires as shown.
7. Tighten the battery post hardware to 90 - 100 in. lbs. (6 -8 Nm) torque. Do not overtighten the terminal stud nut, this will cause a “mushroom” effect on the battery post which will prevent the terminal nut from being correctly tightened.
8. Protect the battery terminals and battery wire terminals with a commercially available coating.

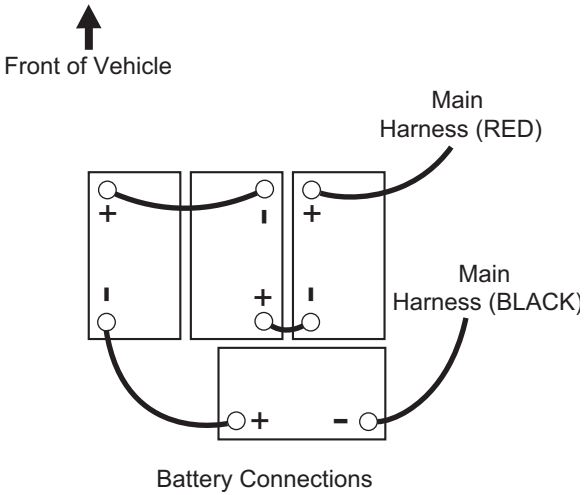

Battery Connections

BATTERY STORAGE

NOTICE: Disconnect the battery charger, controller and other electronic devices for extended storage. All connected electronic components cause the discharge of batteries.

During storage, the batteries must not be allowed to discharge.

In high temperatures the chemical reaction is fast, while low temperatures cause the chemical reaction to slow. A vehicle that is stored at 90° F (32° C) will lose.002 of specific gravity each day. If a completely charged battery has a specific gravity of 1.275, and the battery is not used, it will become partially discharged. When it reaches 1.240, which it will do in less than 20 days, it must be charged again. If a battery stays in a discharged state, sulfating occurs on and within the plates. This condition is not reversible and will cause permanent damage to the battery. To prevent damage, the battery must be charged again. Use a hydrometer to find the specific gravity and the state of charge of a battery.

In winter conditions, the battery must be completely charged to prevent the risk of freezing. A completely charged battery will not freeze in temperatures above -75° F (-60° C). Although the chemical reaction is decreased in cold temperatures, the battery must be stored completely charged, and disconnected from circuits that can discharge the battery. The controller must be disconnected from the batteries by turning the key switch to the OFF position.

For portable chargers, disconnect the charger plug from the vehicle receptacle.

The batteries must be cleaned and all deposits neutralized and removed from the battery case to prevent self discharge.

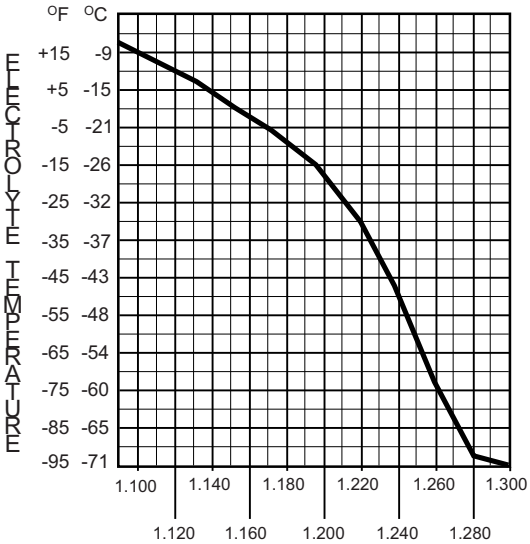

SPECIFIC GRAVITY ELECTROLYTE FREEZING POINT

The batteries must be tested or charged again at 30 day minimum intervals.

BATTERY CHARGING

The battery charger is designed to completely charge the battery set. If the batteries are severely deep cycled, some automatic battery chargers contain an electronic module that will not activate and the battery charger will not operate. Automatic chargers determine the correct length of charge to the battery set and turns off when the batteries are charged. Always refer to the instructions of the charger used.

⚠ CAUTION **Do not overfill batteries. The charge cycle will expel electrolyte and cause component damage.**

Before charging, observe the following:

- The electrolyte level in all cells must be at the recommended level and above the plates.
- Charging must occur in an area with good ventilation to remove hydrogen gas that is produced during the charge cycle. A minimum of five air replacements for each hour is recommended.
- The charger connector components must be in good condition and free from dirt and particles.
- The charger connector must be completely plugged into the vehicle receptacle.
- The charger connector and cord set must be protected from damage. The charger connector and cord set must be used in an area where it is not possible for personnel to run over or trip over the cord set.
- The charger automatically turns off during the connect and disconnect cycle, so there is no electrical arc generated at the DC plug and receptacle contacts.

AC Voltage

The battery charger output is directly related to the input voltage. If the vehicle receives an incomplete charge in a normally adequate time period, low AC voltage can be the cause. Consult an electrician if necessary.

TROUBLESHOOTING

Troubleshooting is done for two reasons:

- A battery that performs poorly and is outside of the manufacturers specification must be identified to replace it within the terms of the manufacturer's warranty. Different manufacturers have different requirements. Refer the battery manufacturer or the manufacturer's representative for specified requirements.
- Find the reason a vehicle does not perform adequately. Performance problems can cause a vehicle to run slowly or can not operate for the time needed.

A new battery must mature before it develops its maximum capacity. Maturing can take 100 or more charge and discharge cycles. After the maturing phase, the older a battery gets, the lower the capacity. The only method to find the capacity of a battery is a load test with a discharge machine. Refer to the discharge machine manufacturer instructions.

A hydrometer is used to identify a poorly performing battery in a set with a low specific gravity. When the particular cell or cells that are the problem are identified, the battery can be removed and replaced. The battery can not be restored. The individual battery should be replaced with a good battery of the same brand, type and approximate age.Hydrometer

⚠ CAUTION **To prevent battery explosion, never insert a metal thermometer into a battery. Use a hydrometer with a built in thermometer that is designed for testing batteries.**

A hydrometer (P/N 50900G1) is used to test the state of charge of a battery cell. This is performed by measuring the density of the electrolyte, which is accomplished by measuring the specific gravity of the electrolyte. The greater the concentration of sulfuric acid, the more dense the electrolyte becomes. The higher the density, the higher the state of charge.

Specific gravity is the measurement of a liquid that is compared to a baseline. The baseline is water which is assigned a base number of 1.000. The concentration of sulfuric acid to water in a new golf car battery is 1.280 which means that the electrolyte weighs 1.280 times the weight of the same volume of water. A fully charged battery will test at 1.275 - 1.280 while a discharged battery will read in the 1.140 range.

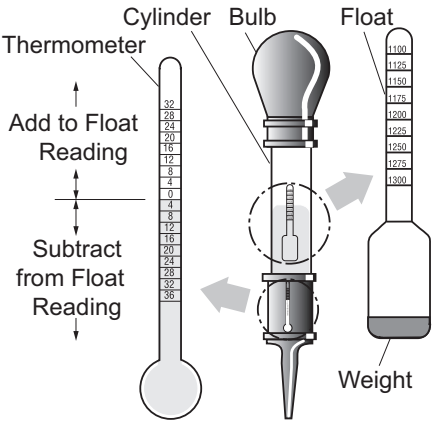

NOTICE: Do not perform a hydrometer test on a battery that has just been watered. The battery must go through at least one charge and discharge cycle in order to permit the water to adequately mix with the electrolyte.

The temperature of the electrolyte is important since the hydrometer reading must be corrected to 80° F (27° C). High quality hydrometers are equipped with an internal thermometer that will measure the temperature of the electrolyte and will include a conversion scale to correct the float reading. It is important to recognize that the electrolyte temperature is significantly different from the ambient temperature if the vehicle has been operated.

Using A Hydrometer

1. Draw electrolyte into the hydrometer and release it several times to permit the thermometer to adjust to the electrolyte temperature and note the reading. Examine the color of the electrolyte. A brown or gray coloration indicates a problem with the battery and is a sign that the battery is nearing the end of its life.
2. Draw the minimum quantity of electrolyte into the hydrometer to permit the float to float freely without contacting the top or bottom of the cylinder.
3. Hold the hydrometer in a vertical position at eye level and note the reading where the electrolyte meets the scale on the float.
4. Add or subtract four points (.004) to the reading for every 10° F (6° C) the electrolyte temperature is above or below 80° F (27° C). Adjust the reading to conform with the electrolyte temperature, e.g., if the reading indicates a specific gravity of 1.250 and the electrolyte temperature is 90° F (32° C), add four points (.004) to the 1.250 which gives a corrected reading of 1.254. Similarly if the temperature is 70° F (21° C), subtract four points (.004) from the 1.250 to give a corrected reading of 1.246.
5. Test each cell and note the readings (corrected to 80° F or 27° C). A variation of fifty points between any two cell readings (example 1.250 - 1.200) indicates a problem with the low reading cell(s).

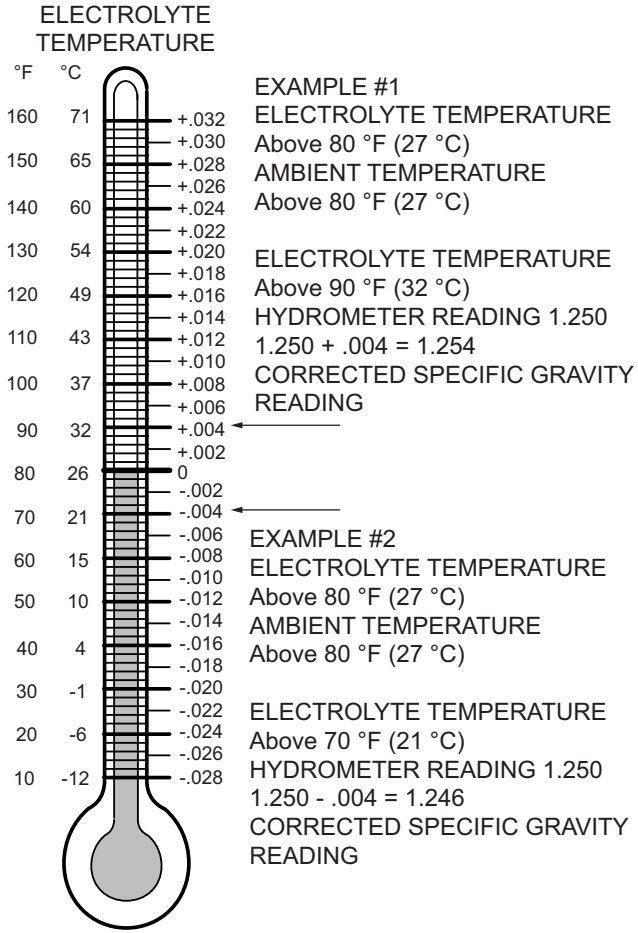

Hydrometer Temperature Correction

As a battery ages the specific gravity of the electrolyte will decrease at full charge. This is not a reason to replace the battery providing all cells are within fifty points of each other.

Since the hydrometer test is in response to a vehicle exhibiting a performance problem, the vehicle should be recharged and the test repeated. If the results indicate a weak cell, the battery or batteries should be removed and replaced with a good battery of the same brand, type and approximate age.

TRANSPORTING THE VEHICLE

WARNING **Do not ride or allow other people on a vehicle being transported on a trailer or being towed with another vehicle.**

Towing the Vehicle

WARNING **Only tow the vehicle for recovery purposes. Before towing, turn the key switch to N and move the run/ tow switch to the TOW position. Ensure brakes and steering are operable.**

Always have a person driving the vehicle to steer and operate brakes when it is being towed. Do not tow the vehicle above 5 mph (8 kph). Failure to abide by these instructions could cause harm to vehicle and persons involved.

Hauling the Vehicle

WARNING **Loose cargo or vehicle components can fly off when the vehicle is being transported. Secure or remove all cargo. Inspect the vehicle for loose components prior to transport.**

Do not allow any people on a vehicle being transported on a trailer.

Remove the windshield and canopy top before you transport a vehicle on a trailer.

- If the vehicle is being hauled on a trailer or truck, the canopy top must be removed.
- The rated capacity of the hauling trailer or truck must be more than the weight of the vehicle and load plus 1000 lbs. (454 kg). *VALOR 6* on page 41 for the weight of the vehicle.

1. Drive the vehicle onto the trailer or truck.
2. Engage the parking brake. Leave the direction selector in F (forward).
3. Turn the key switch to the OFF position.
4. To prevent the loss of the key, remove it from the key switch.
5. Make sure the seats are secured.
6. Secure the vehicle to the trailer or truck with tie downs, straps or ropes.

SPECIFICATIONS

VALOR 6

Item	Specification
Overall Length	141.5 in (359 cm)
Overall Width	45.88 in (117 cm)
Overall Height (no canopy)	48.38 in (123 cm)
Overall Height (with canopy)	72.63 in (184 cm)
Wheelbase	94 in (239 cm)
Track Width (front)	36.25 in (92 cm)
Track Width (rear)	36.25 in (92 cm)
Ground Clearance at Differential	5.5 in (14 cm)
Load Deck Length	33.75 in (86 cm)
Load Deck Width	39.5 in (100 cm)
Turning Radius	16.03 ft (4.9 m)
Outside Clearance Circle	32.05 ft (9.8 m)
Power Source	48 Volts DC
Motor Type	AC Induction
Horsepower (kW) (Peak)	6 hp (4.5 Kw)
Electrical System	48 Volt Primary, 12 Volt Auxiliary
Battery Quantity and Type	Four, 12 Volt Deep Cycle
Key or Pedal Start	Pedal
Battery Charger	48 V 650 W SC-48 (Delta Q) Charger, 3 m charging cord
Speed Controller	350 Amp
Speed (Level Ground)	19.5 Mph (31.4 Kph)
Drivetrain	Motor Shaft Direct Drive
Trans-axle	Limited Slip Differential
Gear Selection	Dash Mounted Forward-Neutral-Reverse
Rear Axle Ratio	16.99:1
Seating Capacity	6 person
Weight (No Batteries)	994 lb (452 kg) (without batteries)
Curb Weight	1322 lb (601 kg)
Dash / IP Storage Capacity	1123 in³ (18403 cm³)
Load Deck Capacity	300 lbs. (136 kg)
Vehicle Load Capacity	1200 lbs. (544 kg)
Steering	Self-compensating reduction rack and pinion
Front Suspension	Leaf springs with hydraulic shock absorbers
Rear Suspension	Leaf springs with hydraulic shock absorbers
Brakes	Dual rear wheel mechanical self-adjusting drum
Parking Brake	Self-compensating, single point engagement
Front and Rear Tires	KENDA K500, 20x8 - 10, 6-Ply
Frame	Welded Steel with DuraShield™ Powder Coat
Body and Finish	Injection Molded TPO
Turning Radius	9.6 ft (2.9 m)
Noise and vibration measurement methods were applied per the ISO 2631 and ISO 5349 standards under conditions of typical vehicle surfaces.	

SPECIFICATIONS

Item	Specification
Noise	Sound pressure: continued A-weighted equal to or less than 68 db (A)
Vibration, WBV	The highest RMS value of weighted acceleration is: 1.15 m/s^2
Vibration, HAV	The highest RMS value of weighted acceleration is: 2.5 m/s^2
	The uncertainty of measurement is 0.2 m/s^2

MAINTENANCE LOG

Record periodic maintenance in the following maintenance log.

DATE	MILES (KM) AND HOURS	TECHNICIAN	SERVICE PERFORMED COMMENTS

MAINTENANCE LOG

DATE	MILES (KM) AND HOURS	TECHNICIAN	SERVICE PERFORMED COMMENTS

APPENDIX A

BATTERY CHARGER USER'S GUIDE

APPENDIX A

delta-q TECHNOLOGIES — *User's Guide* — QuiQ™ HF/PFC Battery Charger

SAVE THESE IMPORTANT SAFETY INSTRUCTIONS

This manual contains important safety and operating instructions – read before using charger.

Warning: **Use charger only with an algorithm selected that is appropriate to the specific battery type. Other usage may cause personal injury and damage. Lead acid batteries may generate explosive hydrogen gas during normal operation. Keep sparks, flames, and smoking materials away from batteries. Provide adequate ventilation during charging. Never charge a frozen battery. Study all battery manufacturers' specific precautions, ie. maximum charge rates and if cell caps should be removed while charging.**

Danger: **Risk of electric shock. Connect charger power cord to an outlet that has been properly installed and grounded in accordance with all local codes and ordinances. A grounded outlet is required to reduce risk of electric shock – do not use ground adapters or modify plug. Do not touch uninsulated portion of output connector or uninsulated battery terminals. Disconnect the AC supply before making or breaking the connections to the battery. Do not open or disassemble charger. Do not operate this charger if the AC supply cord is damaged or if the charger has received a sharp blow, been dropped, or otherwise damaged in any way – refer all repair work to the manufacturer, or qualified personnel. This appliance is not intended for use by persons (including children) with reduced physical, sensory or mental capabilities, or lack of experience and knowledge, unless they have been given supervision or instruction concerning use of the appliance by a person responsible for their safety. Children should be supervised to ensure that they do not play with the appliance.**

INFORMATIONS IMPORTANTES DE SÉCURITÉ

Ce manuel contient des instructions importantes concernant la sécurité et le fonctionnement.

Attention: **Utiliser le chargeur seulement avec un algorithme approprié au type spécifique de batterie. D´autres types de batteries pourraient éclater et causer des blessures ou dommages. Les batteries peuvent produire des gaz explosifs en service normal. Ne jamais fumer près de la batterie et éviter toute étincelle ou flamme nue à proximité des batteries. Fournissez une ventilation adéquate du chargement. Ne jamais charger une batterie gelée. Prendre connaissance des mesures de précaution spécifiées par le fabricant de la batterie, p. ex., vérifier s´il faut enlever les bouchons des cellules lors du chargement, et les taux de chargement.**

Danger: **Risque de chocs électriques. Ne pas toucher les parties non isolées du connecteur de sortie ou les bornes non isolées de la batterie. Toujours connecter le chargeur à une prise de courant mise à la terre. Déconnectez la source AC avant de faire ou défaire les connections à la batterie en chargement. Ne pas utiliser le chargeur si le cordon d'alimentation AC est endommagé ou si le chargeur est abîmé suite à une chute ou autre indicent. Ne pas ouvrir ni désassembler le chargeur – référer toute réparation aux personnes qualifiées. Cet appareil n'est pas destiné à un usage par des personnes (dont les enfants) avec des facultés motrices, sensorielles ou mentales réduites, ou ayant une expérience et des connaissances insuffisantes, à moins qu'elles sont sous la supervision ou reçoivent les instructions sur l'utilisation de l'appareil d'un répondant garant de leur sécurité. Les enfants devraient être surveillés afin qu'il ne jouent en aucun temps avec l'appareil.**

Operating Instructions

CAUTION: Charger enclosure may be hot during charging. Use hand protection if handling the charger while charging.

1. Extension cords must be 3-wire cord no longer than 30m(100') at 10AWG or 7.5m(25') at 16AWG per UL guidelines.
2. Only connect **ONE** QuiQ charger to a single 15A circuit or the circuit may become overloaded.
3. Charger 10-LED Display:

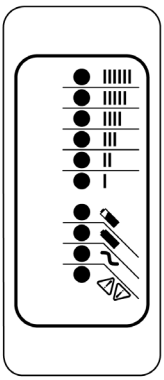

LED Colour		Indication (following "Power-On Self Test")	
Ammeter (Amber)	IIIIII IIIII IIII III II I	**Solid:**	Displays approximate scale of current output during bulk phase.
		Flashing:	High internal charger temperature. Output reduced. Also displays algorithm #1-6 for 11 seconds if no battery is connected.
80% Charge (Amber)		**Solid:**	Bulk charge phase complete, 80% charged. In Absorption phase.
		Flashing:	With no battery connected, indicates algorithm # selected by number of flashes.
100% Charge (Green)		**Solid:**	Charging complete. Charger in Maintenance Mode.
		Flashing:	Absorption phase complete. In Finish phase
AC On (Amber)		**Solid:**	AC Power good
		Flashing:	Low AC Voltage, check voltage and extension cord length (see above for guidelines).
Fault (Red)		**Flashing:**	Charger error. Reset charger power and refer to Troubleshooting Instructions below.

B

APPENDIX A

delta-q TECHNOLOGIES — **User's Guide** — QuiQ™ HF/PFC Battery Charger

SAVE THESE IMPORTANT SAFETY INSTRUCTIONS

This manual contains important safety and operating instructions – read before using charger.

Warning: **Use charger only with an algorithm selected that is appropriate to the specific battery type. Other usage may cause personal injury and damage. Lead acid batteries may generate explosive hydrogen gas during normal operation. Keep sparks, flames, and smoking materials away from batteries. Provide adequate ventilation during charging. Never charge a frozen battery. Study all battery manufacturers' specific precautions, ie. maximum charge rates and if cell caps should be removed while charging.**

Danger: **Risk of electric shock. Connect charger power cord to an outlet that has been properly installed and grounded in accordance with all local codes and ordinances. A grounded outlet is required to reduce risk of electric shock – do not use ground adapters or modify plug. Do not touch uninsulated portion of output connector or uninsulated battery terminals. Disconnect the AC supply before making or breaking the connections to the battery. Do not open or disassemble charger. Do not operate this charger if the AC supply cord is damaged or if the charger has received a sharp blow, been dropped, or otherwise damaged in any way – refer all repair work to the manufacturer, or qualified personnel. This appliance is not intended for use by persons (including children) with reduced physical, sensory or mental capabilities, or lack of experience and knowledge, unless they have been given supervision or instruction concerning use of the appliance by a person responsible for their safety. Children should be supervised to ensure that they do not play with the appliance.**

INFORMATIONS IMPORTANTES DE SÉCURITÉ

Ce manuel contient des instructions importantes concernant la sécurité et le fonctionnement.

Attention: **Utiliser le chargeur seulement avec un algorithme approprié au type spécifique de batterie. D´autres types de batteries pourraient éclater et causer des blessures ou dommages. Les batteries peuvent produire des gaz explosifs en service normal. Ne jamais fumer près de la batterie et éviter toute étincelle ou flamme nue à proximité des batteries. Fournissez une ventilation adéquate du chargement. Ne jamais charger une batterie gelée. Prendre connaissance des mesures de précaution spécifiées par le fabricant de la batterie, p. ex., vérifier s´il faut enlever les bouchons des cellules lors du chargement, et les taux de chargement.**

Danger: **Risque de chocs électriques. Ne pas toucher les parties non isolées du connecteur de sortie ou les bornes non isolées de la batterie. Toujours connecter le chargeur à une prise de courant mise à la terre. Déconnectez la source AC avant de faire ou défaire les connections à la batterie en chargement. Ne pas utiliser le chargeur si le cordon d'alimentation AC est endommagé ou si le chargeur est abîmé suite à une chute ou autre indicent. Ne pas ouvrir ni désassembler le chargeur – référer toute réparation aux personnes qualifiées. Cet appareil n'est pas destiné à un usage par des personnes (dont les enfants) avec des facultés motrices, sensorielles ou mentales réduites, ou ayant une expérience et des connaissances insuffisantes, à moins qu'elles sont sous la supervision ou reçoivent les instructions sur l'utilisation de l'appareil d'un répondant garant de leur sécurité. Les enfants devraient être surveillés afin qu'il ne jouent en aucun temps avec l'appareil.**

Operating Instructions

CAUTION: Charger enclosure may be hot during charging. Use hand protection if handling the charger while charging.

1. Extension cords must be 3-wire cord no longer than 30m(100') at 10AWG or 7.5m(25') at 16AWG per UL guidelines.
2. Only connect **ONE** QuiQ charger to a single 15A circuit or the circuit may become overloaded.
3. Charger 10-LED Display:

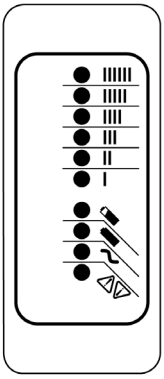

LED Colour		Indication (following "Power-On Self Test")	
Ammeter (Amber)	IIIIII IIIII IIII III II I	**Solid:**	Displays approximate scale of current output during bulk phase.
		Flashing:	High internal charger temperature. Output reduced. Also displays algorithm #1-6 for 11 seconds if no battery is connected.
80% Charge (Amber)		**Solid:**	Bulk charge phase complete, 80% charged. In Absorption phase.
		Flashing:	With no battery connected, indicates algorithm # selected by number of flashes.
100% Charge (Green)		**Solid:**	Charging complete. Charger in Maintenance Mode.
		Flashing:	Absorption phase complete. In Finish phase
AC On (Amber)		**Solid:**	AC Power good
		Flashing:	Low AC Voltage, check voltage and extension cord length (see above for guidelines).
Fault (Red)		**Flashing:**	Charger error. Reset charger power and refer to Troubleshooting Instructions below.

B

INDEX

A

accelerating 18
accelerator pedal 12
anti-roll back feature 17
anti-stall feature 17

B

battery
  disposal 1
  prolonged storage 1
battery charger 16
battery maintenance 33
brakes 32
  periodic test 32
braking 18

C

capacity
  cargo load 7, 21
  fluids 25, 41
  hitch 41
  load 41
  towing 41
cargo
  hauling 21
  maximum load 7, 21
cleaning the vehicle 27
controller system test 30
cup holder 11

D

diagnostic mode 17
driving procedures
  accelerating 18
  braking 18
  downhill 20
  parking 21
  reverse 20
  slippery surfaces 19
  starting and stopping 17
  starting on hill 18
  traversing hillsides 19
  uphill 19

F

fluids
  capacities 25
  recommended 25
fuse replacement 30

G

glove box 12

H

hauling, vehicle 40
headlights 29
high pedal disable feature 17
horn switch 11

K

key switch 11

L

labels, safety 3
lifting, vehicle 10, 26
lubricants, recommended 25
lubrication 30, 31

M

maintenance
  brakes 32
  chart 24
  fluid capacities 25
  rear axle 30
  recommended fluids and lubricants 25
  scheduled 24
maintenance items 25
manufacturer’s Intended use 1

O

operator safety 7

P

parking brake, mechanical 12
pedal up braking 16
performance features 16
  anti-roll back 17
  anti-stall 17
  diagnostic mode 17
  high pedal disable 17
  pedul-up braking 16
  speed control 16
  walk-away 17
PIN plate 2
pre-ride inspection 15

R

rear axle 30
  lubricant level 30

S

safety
  cargo 7, 21
  charging battery 10
  driving downhill 9
  driving in reverse 9

driving uphill 9
driving with passenger 8
labels 3
lifting, vehicle 10, 26
maintenance 10, 23
max speed 9
operation 15
operator 7
pre-ride inspection 15
slippery terrain 10
tire pressure 7, 28
tires 9
turning 9
unauthorized use 8
vehicle modification 10
weight capacity 7, 21
safety symbols 1
scheduled maintenance chart 24
seat bottom 12
serial number labels 2
severe use 24
slippery surfaces 19
specifications, vehicle 41
speed control 16
starting and stopping 17
starting on hill 18
storage compartments 12
switches
horn 11
key 11

T

tires 27
pressure 7, 28
repair 28
replacement 28
transporting the vehicle 40
truck bed 13

V

vehicle
cleaning 27
hauling 40
identification numbers 2
lifting 10
specifications 41
starting and stopping 17
transporting 40

W

walk-away feature 17
warranty information, vehicle 1
washing the vehicle 27
weight capacity, maximum 7, 21
wheels 28, 29
axle and wheel nut torques 28
wheel installation 29
wheel removal 29

TEXTRON SPECIALIZED VEHICLES, INC.
1451 Marvin Griffin Road
Augusta, Georgia 30906 - 3852
USA

CONTACT INFORMATION

North America:

Technical Assistance & Warranty:
Phone: 1-800-774-3946, FAX: 1-800-448-8124
Service Parts Phone:
1-888-GET-E-Z-GO (1-888-438-3946), FAX: 1-800-752-6175

International:

Phone: 001-706-798-4311, FAX: 001-706-771-4609

California Proposition 65

WARNING

Operating, servicing and maintaining a passenger vehicle or off-road vehicle can expose you to chemicals including phthalates and lead, which are known to the State of California to cause cancer and birth defects or other reproductive harm. To minimize exposure, wear gloves and wash your hands frequently when servicing your vehicle.
For more information go to www.P65Warnings.ca.gov/passenger-vehicle

Parts Manuals and Service Manuals are available from a local Distributor, an authorized Branch, Genuine E-Z-GO Parts & Accessories Department or at www.shopezgo.com.

Copyrighted Material
This manual may not be reproduced in whole or in part without the express permission of the manufacturer.