OWNER'S MANUAL

ELiTE Lithium

LIBERTY

with IntelliBrake™ Technology

10049626-C

OWNER'S MANUAL

LIBERTY ELiTE

Model Year 2024+

CONTACT INFORMATION
Textron Specialized Vehicles, Inc.
1451 Marvin Griffin Road
Augusta, Georgia, USA 30906-3852

North America:
1-800-774-3946 Technical Assistance and Warranty
1-888-438-3946 Service Parts
001-706-798-4311 International
www.ezgo.com

WELCOME

Thank you for purchasing this vehicle. Before driving your new vehicle, read this owner's manual to familiarize yourself with safe driving practices, operation, features and controls.

This manual contains instructions for minor maintenance only. Information about major repairs can be found in the service manual. Your dealer has thorough knowledge of your vehicle and wants your total satisfaction with your purchase. We recommend you return to your dealership for all of your service needs during, and after the warranty period.

Repair or replacement parts can be purchased from your dealer or through the manufacturer's parts and accessories department.

These are original instructions as defined by 2006/42/EC.

The manufacturer maintains the right to change the design of the vehicle without responsibility to make the changes on units purchased before changes were made. The information in this manual can change without notice.

All information in this owner's manual is based on the latest product information at the time of publication. Due to constant improvements in the design and quality of production components, some discrepancies may be found between your vehicle and the information presented in this publication. The content in this publication is intended for reference use only. The manufacturer is not liable for omissions or inaccuracies. Any reprinting or reuse of the content in this publication, whether whole or in part, is expressly prohibited.

Printed in USA

INTRODUCTION

MANUFACTURER'S INTENDED USE....1
WARRANTY AND REGISTRATION....1
VEHICLE SERIAL NUMBER LOCATION....1
SERVICE AND PARTS MANUALS....2

SAFETY

MODIFICATIONS – GOVERNMENTAL AND INDUSTRY STANDARDS....3
MAXIMUM WEIGHT CAPACITY....3
TIRE PRESSURE....3
OPERATOR SAFETY....3
OWNER RESPONSIBILITY....4
- Unauthorized Use....4
- Operating without Instruction....4
- Alcohol or Drugs....4
- Before Operating....5
- Operation With a load....5
- Reverse Operation....5
- Damaged Vehicle....5
- Maximum Speeds....5
- Different Surfaces....5
- Public Roads....5
- Turning....5
- Uphill Operation....5
- Downhill Operation....5
- Tires....5
- Slippery Terrain....6

BATTERY CHARGING....6
BATTERY DISPOSAL....6
BATTERY SAFETY INFORMATION....6
VEHICLE LIFTING....6
VEHICLE MODIFICATION....6
MAINTENANCE SAFETY....6

SAFETY LABELS

OPERATION....9
RUN/TOW SWITCH OPERATION....9
PATENT NOTICE....9
ELECTRIC SHOCK (CE)....10
BATTERY WARNING....10
MAINTENANCE TOWING....10
BRAKE RELEASE....10

FEATURES AND CONTROLS

KEY SWITCH / DIRECTION SELECTOR 11
HEADLIGHT SWITCH 11
HORN SWITCH 11
STATE OF CHARGE (SOC) METER 11
CUP HOLDERS 11
USB PORT 11
BATTERY CHARGER PORT 12
STEERING WHEEL 12
TURN SIGNAL 12
BRAKE PEDAL 12
ACCELERATOR PEDAL 12
PARKING BRAKE 12
GLOVE BOX / STORAGE COMPARTMENTS 12
REARVIEW MIRROR 13
SIDE MIRRORS 13
HIP RESTRAINTS 13
SEATS 13
CANOPY TOP AND WINDSHIELD 13

OPERATION

SAFETY 15
BEFORE INITIAL USE 15
DAILY INSPECTION 15
BATTERY CHARGER OPERATION 15
PERFORMANCE FEATURES 16
- Speed Control 16
- Pedal-Up Braking 16
- High Pedal Disable Feature 16

STARTING AND STOPPING THE VEHICLE 16
- Starting on a Hill 17

ACCELERATING 17
BRAKING 17
- Coasting 17

DRIVING PROCEDURE 17
DRIVING WITH PASSENGERS 17
SLIPPERY SURFACES 17
DRIVING UPHILL 18
TRAVERSING HILLSIDES 18
DRIVING DOWNHILL 18
DRIVING IN REVERSE 18
PARKING THE VEHICLE 19
TOWING 19

VEHICLE MAINTENANCE

MAINTENANCE SAFETY....21
SCHEDULED MAINTENANCE....21
SCHEDULED MAINTENANCE CHART....22
RECOMMENDED LUBRICANTS AND FLUIDS....23
REPLACEMENT OF MAINTENANCE ITEMS....23
LIFTING THE VEHICLE....23
Lifting Front....24
Lifting Rear....24
Lowering Vehicle....24
VEHICLE CLEANING AND CARE....24
Washing the Vehicle....24
Polishing the Vehicle....24
TIRES....24
Tire Pressure....25
Tire Repair....25
Tire Replacement....25
WHEELS....26
Wheel Removal....26
Wheel Installation....26
LIGHTS....26
Headlight Replacement....26
Tail Light/Brake Light Replacement....27
FUSE REPLACEMENT....27
CONTROLLER SYSTEM TEST....27
REAR AXLE....27
Checking the Lubricant Level....27
HYDRAULIC BRAKES....27
Hydraulic Brake Fluid....27
Check Brake Fluid Level....28
TRANSPORTING THE VEHICLE....28
Hauling the Vehicle....28
Towing the Vehicle....28
MANUAL RELEASE OF INTELLIBRAKE™....29

BATTERY MAINTENANCE

LITHIUM-ION BATTERY MODULE SAFE OPERATION....31
BATTERY CHARGING....32
AC Voltage....32
BATTERY INSPECTION....32
Battery Cover Removal....33
BATTERY SHIPPING....33
BATTERY PROLONGED STORAGE....33

Storage Preparation 33
Setting State of Charge (SOC) 33
During Storage 33
Extreme Low Temperature Storage 33
Returning Vehicle to Service 34
BATTERY FAULT DIAGNOSIS 34
BATTERY CHARGER MAINTENANCE 34
BATTERY DISPOSAL 34

VEHICLE SPECIFICATIONS

LIBERTY 35

MAINTENANCE LOG

APPENDIX A

QUIQ CHARGER USER'S GUIDE 39

APPENDIX B

RC900 CHARGER USER'S GUIDE 43

APPENDIX C

E-Z-GO ELITE CHARGER USER'S GUIDE 47

INTRODUCTION

The following symbols appear throughout this manual and on vehicle labels. Your safety is involved when these symbols are used. Become familiar with their meanings before reading the manual.

DANGER DANGER indicates a hazardous situation that, if not avoided, will result in death or serious injury.

WARNING WARNING indicates a hazardous situation that, if not avoided, could result in death or serious injury.

CAUTION CAUTION indicates a hazardous situation that, if not avoided, could result in minor or moderate injury.

NOTICE **NOTICE provides key information by clarifying instructions.**

The PROHIBITION SAFETY SIGN indicates an action NOT to take in order to avoid hazard.

The MANDATORY ACTION SIGN indicates an action that NEEDS to be taken to avoid a hazard.

WARNING Failure to comply with the warnings in this manual can result in severe injury or death.

Read this entire manual carefully before operating this vehicle. Do not attempt to operate this vehicle until you have thorough knowledge of the controls and features.

Regular inspections and maintenance, along with good operating techniques, will help ensure your safe enjoyment of the capabilities and reliability of this vehicle.

This vehicle was designed and manufactured in the United States of America (USA). The standards and specifications in the following information originate in the USA unless otherwise indicated.

When servicing motors, all adjustments and replacement components must be per original vehicle specifications to maintain the USA Federal and State emission certification applicable at the time or manufacture.

MANUFACTURER'S INTENDED USE

This vehicle is designed and manufactured for off road use only. Use on public streets, roads or highways is illegal in most areas and increases the risk of an accident involving other vehicles and people. This vehicle does not meet FMVSS (Federal Motor Vehicle Safety Standards) for public street, road, or highway use.

Check all laws and regulations before choosing an area to operate your vehicle.

WARRANTY AND REGISTRATION

Register the vehicle at www.ezgo.com.

A vehicle warranty statement is included with the purchase of a new vehicle.

Use Original Equipment Manufacturer (OEM) approved parts to keep the vehicle warranty effective.

All information, including coverage, limitations, exclusions and how to obtain warranty service is included in the literature package with the purchase of the vehicle. It can also be obtained from an authorized dealer.

VEHICLE SERIAL NUMBER LOCATION

Four serial number and manufacture date code labels are on the vehicle:

- One label is located on the lower right wall of the dash panel.
- The second label is located on the driver side frame under the front splash shield.
- The third and fourth labels are located on the passenger side frame rail at the rear of the vehicle.

A PIN label is located on the passenger side frame under the front splash shield.

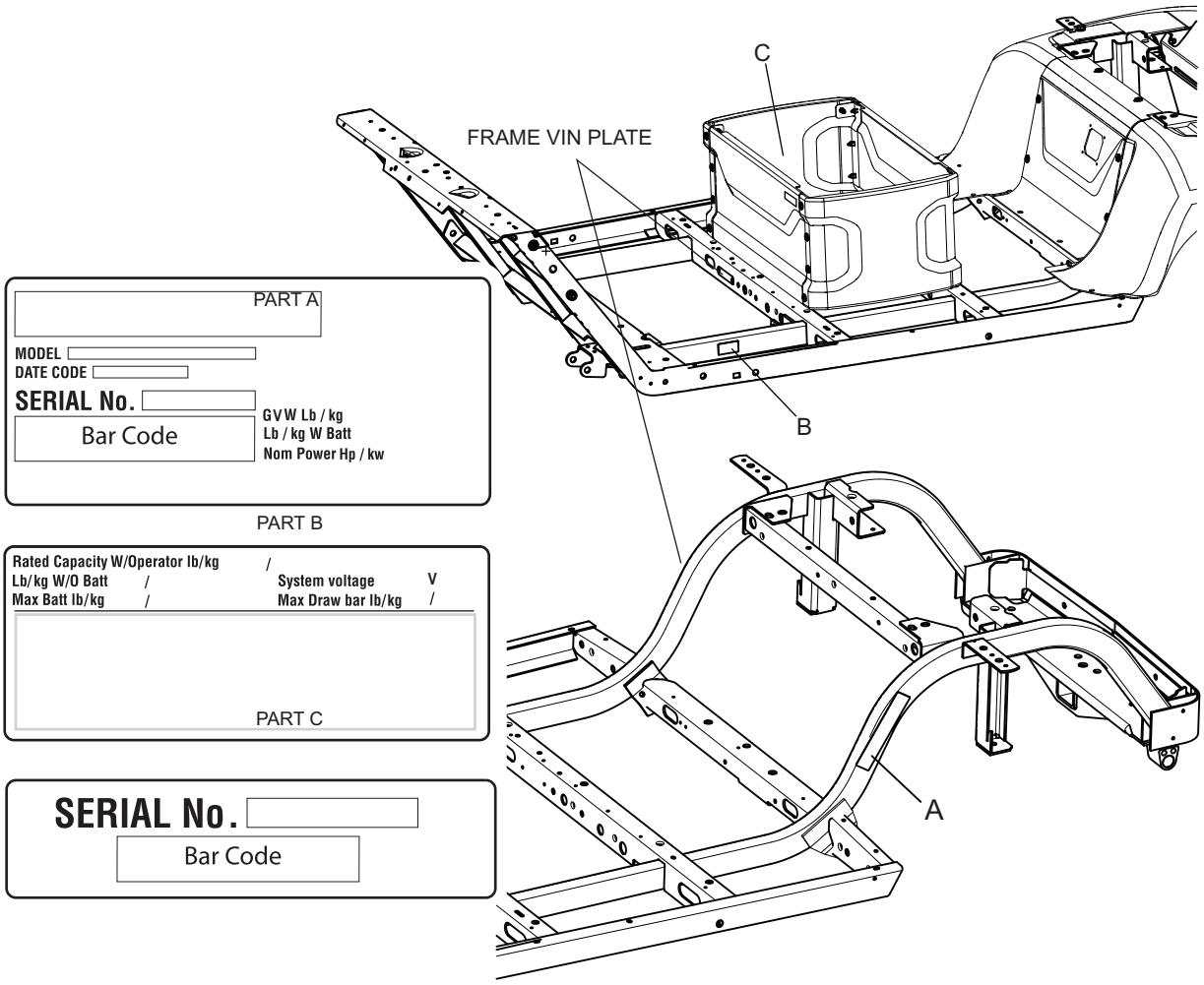

Design changes occur on a continuous basis. To order the correct components for the vehicle, the serial number or PIN and manufacture date are required.

Record the vehicle identification numbers in the spaces provided below. These identification numbers are required when ordering parts from the manufacturer.

Vehicle Serial Number	
Vehicle PIN	

SERVICE AND PARTS MANUALS

The following manuals can be purchased through a dealer:

- service manual
- parts manual

SAFETY

For questions about your vehicle or the material in this manual, see the contact information on page i or the back of this publication.

Safety and warning labels are on the vehicle for your protection. Read and comply with the instructions on the labels carefully. If any label shown in this manual is different from the label on your vehicle, always follow the instructions on the vehicle label.

If a label comes off or becomes illegible, contact your dealer for a replacement. The part number is provided in this manual, printed on the label, or can be obtained from your dealer.

MODIFICATIONS – GOVERNMENTAL AND INDUSTRY STANDARDS

Certain replacement parts can be used independently and/or in combination with other accessories to modify a TSV-manufactured vehicle to permit the vehicle to operate at or in excess of 20 mph. When a TSV-manufactured vehicle is modified in any way by the Distributor, Dealer or customer to operate at or in excess of 20 mph on public streets or roads, UNDER FEDERAL LAW the modified product will be a Low Speed Vehicle (LSV) subject to the strictures and requirements of Federal Motor Vehicle Safety Standard 571.500. In these instances, pursuant to Federal law the Distributor or Dealer MUST equip the product with headlights, rear lights, turn signals, seat belts, top, horn and all other modifications for LSVs mandated in FMVSS 571.500, and affix a Vehicle Identification Number to the product in accordance with the requirements of FMVSS 571.565. Pursuant to FMVSS 571.500, and in accordance with the State laws applicable in the places of sale and use of the product, the Distributor, Dealer or customer modifying the vehicle also will be the Final Vehicle Manufacturer for the LSV, and required to title or register the vehicle as mandated by State law.

Information on FMVSS 571.500 is found at Title 49 of the Code of Federal Regulations, section 571.500. For information on-line, go to www.ecfr.gov.

The manufacturer will NOT approve Distributor, Dealer or customer changes that change a *vehicle* into a Low Speed Vehicle (LSV).

This vehicle meets the current applicable standard for safety and performance requirements.

MAXIMUM WEIGHT CAPACITY

WARNING Exceeding weight capacities can cause loss of vehicle control and possible injury or death.

Maximum Vehicle Weight Capacity	800 lb (363 kg)

Do not exceed the maximum vehicle weight capacity (includes weight of operator, passengers, cargo, and accessories and trailer tongue weight).

TIRE PRESSURE

WARNING Improper tire pressure or uneven tire pressure can cause loss of vehicle control and possible injury or death.

Maintaining correct tire inflation pressure is essential for safe vehicle operation. You can vary the inflation pressure, within the recommended range to suit the condition of the terrain.

TIRE PRESSURE RANGE	TERRAIN CONDITIONS	RECOMMENDATION
18 - 22 psi (124 - 152 kPa)	Hard surfaces or pavement	Inflate to higher pressure within the range; never exceed maximum pressure indicated.
	Soft terrain or turf	Inflate to lower pressure within the range to reduce potential damage to the terrain or turf.

OPERATOR SAFETY

Safe and responsible use of this vehicle is necessary to prevent dangerous conditions for the operator, passengers and other people in the area of operation. The OPERATION section of the manual provides information on the safe operation of the vehicle. Make sure you read, understand and comply with all of this information to decrease the risk of personal injury or death.

WARNING Failure to operate this vehicle as instructed can cause collision, loss of control or rollover resulting in severe injury or death. Follow all safety warnings in this owner's manual. See the OPERATION section for operating procedures and additional safety information on page 15.

- Read this entire manual and all product labels carefully. Follow the safety information and operating procedures described.

- Operate the vehicle responsibly to prevent dangerous conditions for the operator, passengers, and other people in the area of operation
- Operate the vehicle responsibly and keep the vehicle in safe condition of operation.
- A damaged vehicle or a vehicle that is not functioning properly is dangerous and must not be operated until repairs are made.
- Keep feet, legs, hands, and arms inside the vehicle at all times.
- The driver must keep both hands on the steering wheel and both feet on the floor or pedals.
- Inspect the vehicle before each use to make sure it is in safe operating condition. Perform the Daily inspection described on page 15.
- Always have the vehicle checked by an authorized dealer if it is involved in an accident.
- Remove the key from the key switch when the vehicle is not in use to prevent accidental starting or unauthorized use.
- Drive the vehicle at appropriate speeds for the terrain and conditions. Be aware of environmental conditions that change the terrain and your ability to control the vehicle.
- Do not drive on excessively steep hills. Evaluate the terrain before descending a hill. Drive slowly and deliberately. Use the brake to limit speed and maintain control. Sudden braking or turning can cause the loss of vehicle control.
- Drive straight up or down the hill. Do not drive across the hill.
- Operate only in approved areas. Follow all applicable safety rules for the area.
- Avoid driving on terrain that is too rough for the vehicle's capabilities and your driving skills.
- Before driving in the reverse direction, make sure the area behind the vehicle is clear. Accelerate slowly and avoid making sharp turns.
- Make sure the direction selector is in the correct position before pressing the accelerator pedal.
- Decrease speed before and during turns.
- Decrease speed when driving on wet or slippery surfaces.
- Bring the vehicle to a complete stop before moving the direction selector.
- Do not exceed the cargo or vehicle weight capacities. Do not exceed the occupant capacity. See VEHICLE SPECIFICATIONS on page 35 for the vehicle load and seat capacity.
- If there is a risk of lightning, leave the vehicle and look for a safe location to wait until the lightning has stopped.

Additional information about safety is included throughout this manual and can be obtained from your local dealer.

OWNER RESPONSIBILITY

Improper use, maintenance, or modification of this vehicle can lead to serious injury or death.

Require proper use of your vehicle. Do not allow anyone to operate your vehicle or ride as a passenger unless they are properly instructed and you are sure they are willing to ride responsibly. To prevent unauthorized use, always remove the key when the vehicle is not in use.

Unauthorized Use

Anyone who does not have a valid driver's license is not permitted to operate the vehicle.

Anyone who is be below the height of 59 in. (150 cm) is not permitted to operate the vehicle.

Leaving the key in the key switch allows unauthorized operation of the vehicle by an unlicensed driver or someone who does not meet the height requirement. Always remove the key from the key switch when the vehicle is not in operation.

Operating without Instruction

Operation of this vehicle without proper instruction increases the risk of an accident. The operator must understand how to operate the vehicle correctly in different situations and on different types of terrain.

All operators must read, understand, and comply with all warning and instruction labels before operating the vehicle.

Alcohol or Drugs

Operation of the vehicle during or after consuming alcohol or drugs can adversely affect operator judgment, reaction time, balance, and perception.

Never drink alcohol or use drugs or medications before or during operation of the vehicle.

Before Operating

Perform the DAILY INSPECTION on page 15 before each use to make sure the vehicle is in safe operating condition. Failure to inspect and confirm that the vehicle is safe to operate increases the risk of an accident.

Follow all inspection and maintenance procedures and schedules described on page 22.

Operation With a load

The weight of cargo and occupants affects vehicle operation. Carefully calculate how the vehicle is loaded and how to safely operate it.

Do not exceed weight capacities specified for your vehicle. Capacities are listed in Maximum Weight Capacity on page 3 of this manual, and also on the label affixed to the truck bed. As passenger weight increases, cargo weight needs to be adjusted to ensure the maximum vehicle weight capacity is not exceeded.

Reverse Operation

Make sure the area behind the vehicle is clear before operating in reverse. After making sure it is clear and safe to operate in reverse, accelerate slowly. Avoid making sharp turns in reverse. Refer to DRIVING IN REVERSE on page 18 for operational information.

Damaged Vehicle

Driving a damaged vehicle is not safe.

If your vehicle has been involved in any type of accident, have it inspected by a qualified service dealer to verify that it is safe for operation.

Maximum Speeds

Maximum speed operation increases risk of loss of control. Always drive at a speed that is appropriate for the terrain, visibility, operating conditions, and your skill and experience level. Use the brake to control the speed and maintain control of the vehicle.

Different Surfaces

Driving the vehicle on different surface types can affect handling characteristics of the vehicle. When driving on a dirt road, loose surface, or wet grass, the distance required to stop the vehicles will increase.

Public Roads

Driving this vehicle on public streets, roads or highways could result in a collision with another vehicle. Never drive this vehicle on any public street, road, or highway, including dirt and gravel roads, unless they are designated for off road use. Most areas prohibit the operation of this vehicle on public streets, roads or highways, and can result in traffic violations and fines.

Turning

Improper or careless turning can cause loss of traction, loss of control, accident, or rollover. Do not turn quickly or at sharp angles. Do not turn at high speeds. Practice turning at slow speeds before attempting to turn at faster speeds.

Uphill Operation

Do not climb hills that are too steep for the vehicle or your driving abilities. Loss of vehicle control or rollover can result from climbing hills incorrectly. Refer to DRIVING UPHILL on page 18 for operational information.

Downhill Operation

Inspect the terrain before descending a hill. Avoid driving across hills. Use the brake to limit speed and maintain control. Loss of vehicle control or rollover can result from driving downhill incorrectly. Refer to DRIVING DOWNHILL on page 18 for operational information.

Tires

Operating the vehicle with incorrect tires or with incorrect or uneven tire pressure can cause loss of control or an accident. Always use the size and type tires specified in the *VEHICLE SPECIFICATIONS* section beginning on page 35. Always maintain correct tire pressures as specified in Tire Pressure on page 3.

Slippery Terrain

Driving on rough, wet or loose terrain increases the risk of loss of traction or control, accident or rollover. Drive slowly and use correct turning procedures when operating on slippery surfaces.

Tires that have lost traction, and then regain traction suddenly, can cause loss of vehicle control or rollover.

Refer to SLIPPERY SURFACES on page 17 for operational information.

BATTERY CHARGING

Charging should be performed when ambient temperatures are between 40°F and 110°F (4°C and 42°C). The battery module may be charged or topped off after every use. See BATTERY CHARGING on page 32.

BATTERY DISPOSAL

See BATTERY DISPOSAL on page 34 for disposal of batteries that have been removed from service.

BATTERY SAFETY INFORMATION

WARNING Batteries that have been submerged or flooded can cause damage including leaks, fire, and explosion. If batteries have been submerged or flooded:

- do not charge the vehicle until battery has been replaced
- remove vehicle from service
- park vehicle outdoors, at least 15 feet away from structures or other vehicles

Do not open the battery module. If the battery module is opened, electrical shock, explosion, or fire can occur. The battery module is not serviceable and must be replaced if it fails or becomes damaged.

In the event the vehicle is affected by fire:

1. ***Evacuate immediately – remove all persons from the affected area.***
2. ***Call Emergency Services – dial 911 or your local emergency number.***
3. ***Do not re-enter – stay out of the area until cleared by emergency personnel.***

Refer to LITHIUM-ION BATTERY MODULE SAFE OPERATION on page 31 for additional operation and safety information.

VEHICLE LIFTING

The vehicle must be on a firm and level surface for lifting. Remain constantly aware that the vehicle is not stable during the lifting process. Do not get under a vehicle until you verify that it is stable on the jack stands. Never get under a vehicle while it is on a jack only. Put wheel chocks in front and behind the wheels that are not being lifted. Do not allow anyone to remain or get on the vehicle at any time during the lifting process.

Read and comply with all warnings and follow the lifting procedures described on page 23.

VEHICLE MODIFICATION

Do not install any accessory not approved by the manufacturer. Do not modify the vehicle to increase speed or power. Any modifications or installation of accessories not approved by the manufacturer can create a safety hazard and increase the risk of injury.

The warranty will be terminated if the vehicle is modified to increase vehicle speed or power.

The warranty may be terminated if original (or equivalent) replacement parts are not installed on the vehicle.

The addition of some accessories can change the handling characteristics of the vehicle. Use only manufacturer approved accessories and familiarize yourself with their function and effect on the vehicle.

MAINTENANCE SAFETY

Routine and scheduled maintenance of this vehicle is necessary to keep the vehicle in safe and reliable condition. This section of the manual provides safety information for performing maintenance on your vehicle. Make sure you read, understand, and comply with all of this information to decrease the risk of personal injury or death.

WARNING Serious injury or death can occur if you do not follow the instructions and procedures shown in this owner's guide.

- Read this entire manual and all product labels carefully. Follow the procedures and comply with the safety information in this manual while performing vehicle service or maintenance.
- Use the tools shown in the tool list and wear the specified safety equipment when performing vehicle service or maintenance.
- Remove all jewelry before servicing the vehicle.
- Do not allow loose clothing or hair to contact the moving parts.

- Do not touch hot objects.
- The drive wheels must be lifted and supported on jack stands before performing any service to the power-train while the motor is in operation.
- Use wheel chocks and support the vehicle on jack stands. NEVER get under a vehicle that is supported by a jack. Lift the vehicle following the instructions on page 23.
- Always wear eye protection while servicing the vehicle.
- Wear a face shield when working around the battery module.
- Use insulated tools within the battery area to prevent blowing the internal BMS fuse. Only a dealer or certified technician can repair a blown BMS fuse.
- To prevent the risk of battery explosion, keep all flammable materials, open flames, or sparks away from the battery module.
- Always keep your hands, face, feet and body away from any area that can expose them to injury if an unexpected situation occur.
- After making repairs or performing maintenance, test the vehicle in a safe area that is free from vehicle and pedestrian traffic.

SAFETY LABELS

Safety and warning labels are on the vehicle for your protection. Read and comply with the instructions on the labels carefully. If any label shown in this manual is different from the label on your vehicle, always follow the instructions on the vehicle label.

If a label comes off or becomes illegible, contact your dealer for a replacement. The part number is provided in this manual, printed on the label, or can be obtained from your dealer.

OPERATION

Located on the dash panel.

P/N 10013899 or 651654 (CE)

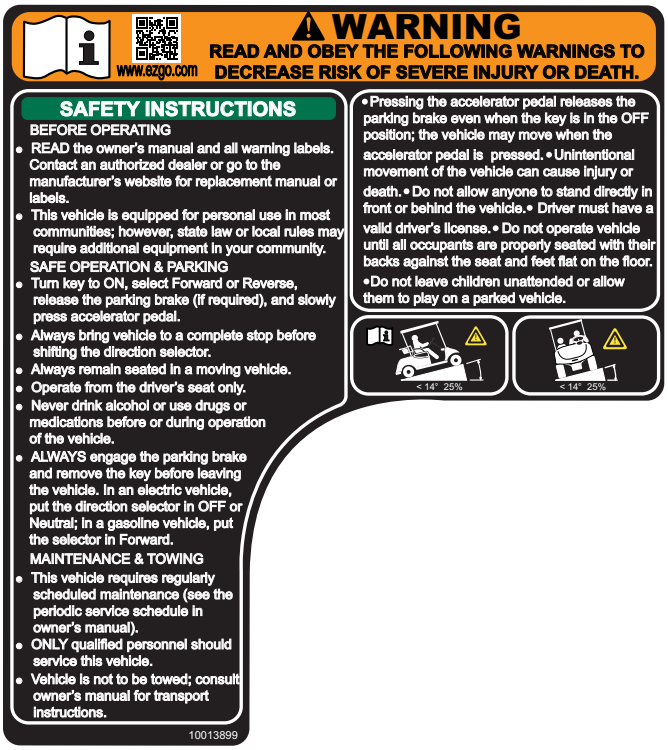

RUN/TOW SWITCH OPERATION

Located on the run/tow switch.

P/N 10006303

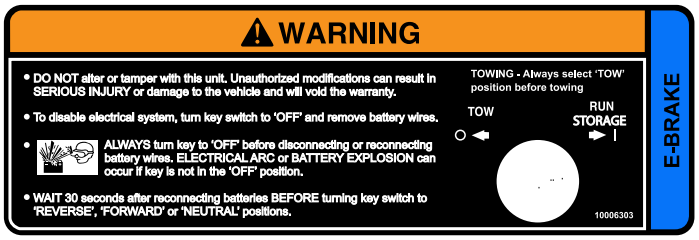

PATENT NOTICE

Located inside the driver's side dash storage compartment.

P/N 10005569

ELECTRIC SHOCK (CE)

Located on the controller splash shield.

P/N 71415G01

BATTERY WARNING

Located on the battery cover.

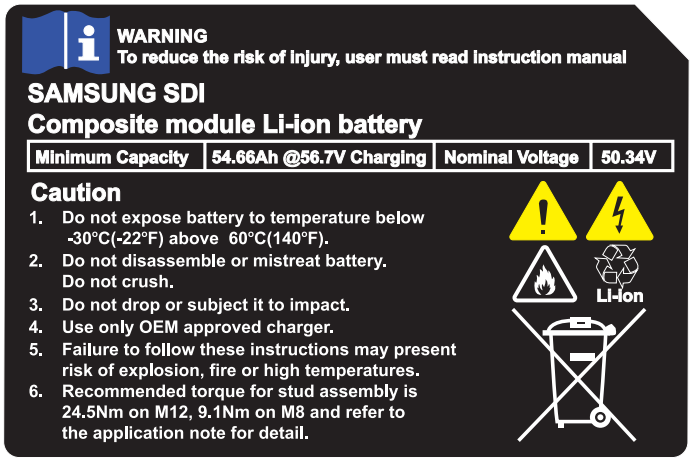

MAINTENANCE TOWING

Located on the bagwell closeout bracket.

P/N 10049683

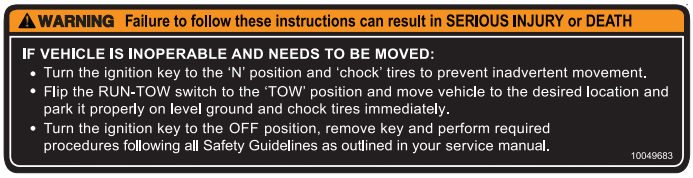

BRAKE RELEASE

Located on the bagwell closeout bracket.

P/N 609694

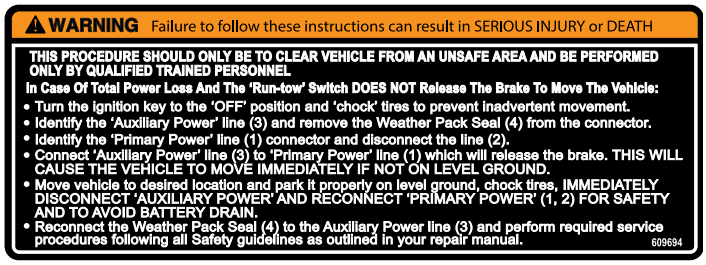

FEATURES AND CONTROLS

NOTICE

Additional 12V accessories must be connected to the DC to DC converter.

Some accessories continue to operate with the key in the OFF position. Leaving these accessories activated after the vehicle is shut down can cause battery discharge.

KEY SWITCH / DIRECTION SELECTOR

The four-position switch controls the basic electrical system of the vehicle.

- OFF:
  vehicle is disabled
- R:
  activates electronics and accessory power and puts the vehicle in reverse
- N:
  activates electronics and accessory power and puts the vehicle in neutral
- F:
  activates electronics and accessory power and puts the vehicle in forward

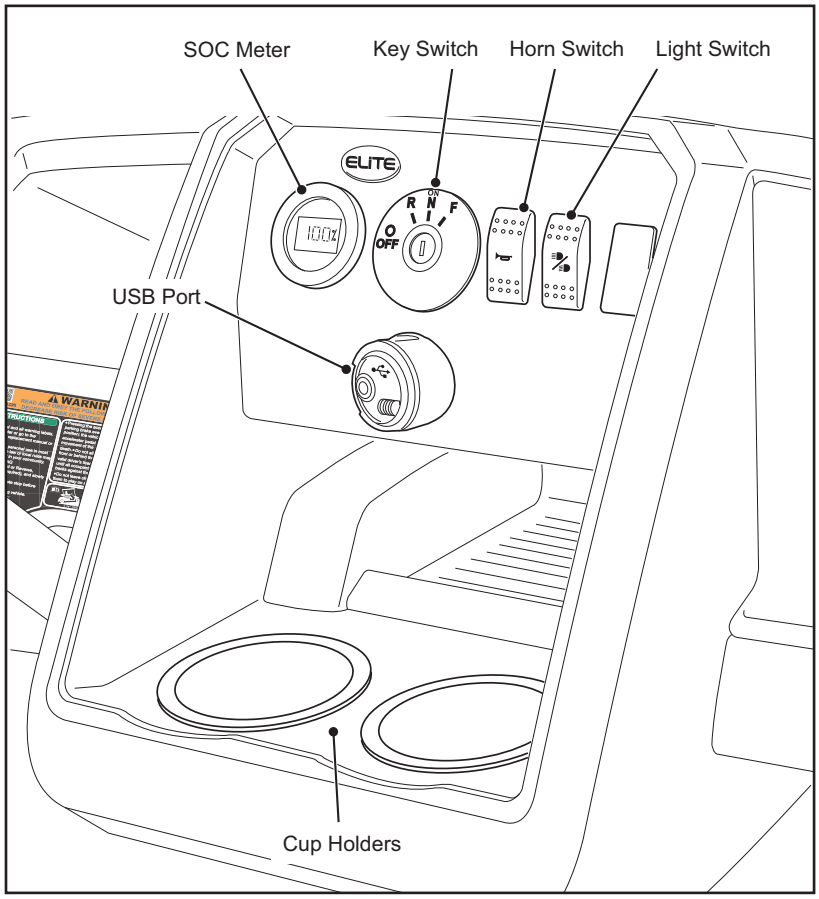

HEADLIGHT SWITCH

The LED headlight switch is a three-position switch.

- upper – low beam
- middle – daytime running lights
- lower – off

HORN SWITCH

The horn switch is the red toggle switch on the console. The horn activates when the top of the switch is pressed.

STATE OF CHARGE (SOC) METER

The SOC meter indicates the amount of usable power in the batteries.

- 100% – full charge
- 0% – no charge
- LOWBAT – immediate charge required

The meter functions as a speedometer and hour meter when the vehicle is in motion.

CUP HOLDERS

The vehicle has a center cup holder that will accommodate two beverage containers. Another cup holder is located to the left of the steering column and will accommodate a larger beverage container.

USB PORT

NOTICE

Excessive use of accessories that are connected to the USB port can cause battery discharge.

The USB port supplies power for electronic devices via a USB cable when the key switch in any position other than OFF.

BATTERY CHARGER PORT

The battery charger port is located on the panel below the rear seat. The port connects the vehicle to a power source to recharge battery packs.

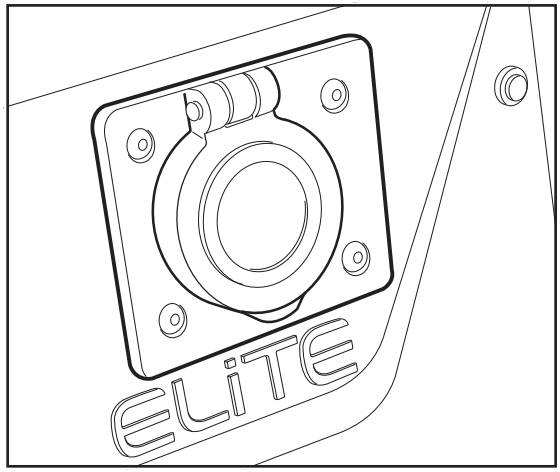

STEERING WHEEL

The steering wheel allows the driver to control the direction of travel.

TURN SIGNAL

The optional turn signal switch is located on the steering column and is used to activate the turn signals.

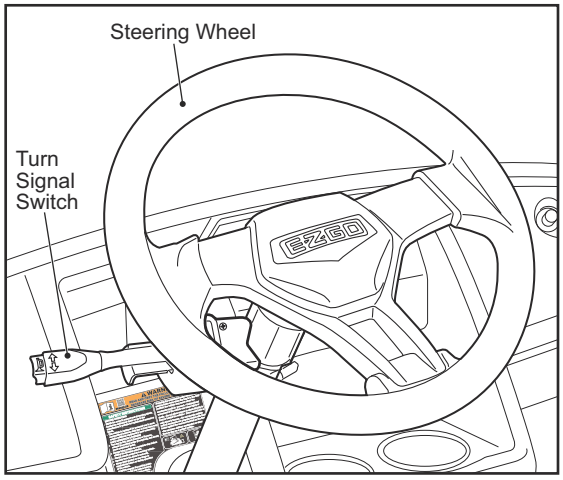

BRAKE PEDAL

The brake pedal is the left pedal on the floorboard and controls braking function.

The brake pedal allows the operator to slow the speed or bring the vehicle to a complete stop by pressing the pedal.

ACCELERATOR PEDAL

The accelerator pedal is the right pedal on the floorboard. It activates the electric motor and controls the acceleration of the vehicle.

Pressure applied to the accelerator pedal increases vehicle speed.

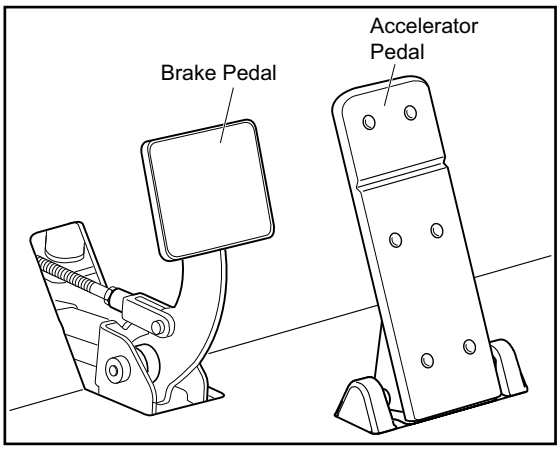

PARKING BRAKE

The vehicle is equipped with an electronic parking brake (IntelliBrake™) that is activated when the vehicle is stopped. The parking brake releases when the vehicle is in the F or R position and the accelerator pedal is pressed.

GLOVE BOX / STORAGE COMPARTMENTS

The glove box provides storage space for small items. Glove boxes may be equipped with optional shelves and/or doors.

REARVIEW MIRROR

The optional rearview mirror is mounted to the upper bar of the front strut and can be adjusted for optimum visibility.

Adjust mirror before each use for clear rear and side views. Be sure to check blind spots before merging or operating in reverse.

SIDE MIRRORS

The optional side mirrors are adjustable for optimum visibility to surroundings during operation.

Adjust mirror before each use for clear rear and side views. Be sure to check blind spots before merging or operating in reverse.

HIP RESTRAINTS

The hip restraints are designed to help keep the occupants properly positioned in the event of unexpected vehicle movement. All passengers must be seated and holding onto the hip restraints during vehicle operation.

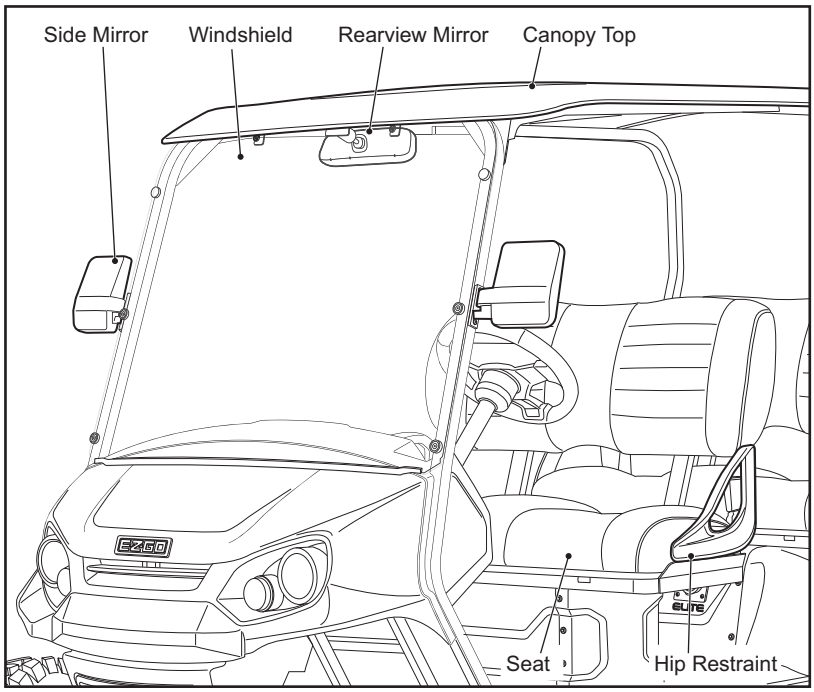

SEATS

Each bench seat is designed for two occupants.

The seats can be pivoted forward or completely removed to access components underneath.

CANOPY TOP AND WINDSHIELD

CAUTION To prevent damage to the vehicle, do not hold on to the canopy top struts while the vehicle is moving.

The optional canopy top and windshield enhances the riding experience. The canopy mounts to the vehicle struts and allows water to drain from the front strut. The canopy top and windshield provides some protection from the elements. but do not keep occupants dry from heavy rain or provide protection from storms.

WARNING If there is a risk of lightning, leave the vehicle and look for a safe location to wait until the lightning has stopped.

The canopy top does not provide protection from rollover or falling objects.

Avoid cleaning the windshield with abrasive materials.

OPERATION

NOTICE **Some accessories continue to operate with the key switch in the OFF position. Leaving these accessories activated after the vehicle is shut down can cause battery discharge.**

CAUTION To prevent damage to the vehicle, do not hold on to the canopy top struts.

SAFETY

WARNING Failure to operate the vehicle correctly can result in a collision, loss of control, accident or rollover, and cause serious injury or death. Follow all operation procedures in this section of the manual. Read and comply with all safety warnings in the safety section of this owner's manual. This is a light-duty vehicle; it is NOT an All Terrain Vehicle (ATV).

BEFORE INITIAL USE

To prepare your new vehicle for operation, check for possible leaks that may have developed during shipment of the vehicle.

WARNING Never charge a vehicle near flammable materials, open flame, or sparks. Never charge a vehicle near gas water heaters or furnaces.

- Charge the batteries fully. See BATTERY CHARGING on page 32.
- Perform the following daily inspection.

DAILY INSPECTION

Inspect and verify that the vehicle is in safe operating condition before each use to decrease the risk of an accident. Check the items in the table to help ensure safe and reliable operation.

Item	Check
Brake system/pedal travel	Check for proper operation.
IntelliBrake® (Parking brake)	Check that vehicle does not roll when parked.
Front suspension	Check for loose/missing hardware.
Rear suspension	Check for leaks and loose/missing hardware.
Steering	Check for smooth and free operation.
Tires	Check condition and pressure. See page 3.
Wheel hardware	Check for loose/missing hardware.
Frame hardware	Check for loose/missing hardware.
Fluid leakage	Inspect vehicle for leaks.
Switches	Check operation.
Reverse warning alarm	Check operation.

BATTERY CHARGER OPERATION

The charger should be operated in accordance with the charger manufacturer's instructions. Always place the charger outside the vehicle before and during the charging cycle (does not apply to on-board charger). Never charge the battery pack in a hazardous environment.

DANGER Risk of electric shock. Connect the charger power cord to an outlet that is correctly installed and connected to an electrical ground according to all codes and regulations. A grounded outlet is necessary to decrease the risk of electric shock – do not use ground adapters or replace the plug. Do not touch parts of output connector or battery terminals that do not have insulation.

Disconnect the AC plug before you make or break the connections to a battery that is charging. Do not open or disassemble the charger. Do not operate the charger if the AC cord is damaged. Any repair work performed on the charger must be done by qualified personnel only.

Refer to the appropriate APPENDIX for the charger manufacturer User's Guide for operating instructions, maintenance instructions and troubleshooting instructions.

The battery charger will test the temperature of the battery pack. If the temperature is too hot or too cold the charger will shutdown. If the battery pack temperature is within the safe to charge range the charger will operate.

PERFORMANCE FEATURES

NOTICE **The vehicle operates when the run/tow switch is in the RUN position.**

The controller monitors and regulates the speed of the motor.

Speed Control

WARNING The speed control system is not an alternative for the brake. Use the brake to control speed and decrease the risk of injury.

Speed control system vehicles are equipped with a regenerative motor control system.

Example: If all of the following events occur:

- the vehicle is being driven down a slope
- the vehicle attempts to exceed the specified top speed with the accelerator pedal pressed or released

The regenerative brake will limit the speed of the vehicle to the specified top speed but the warning beeper will not activate. When the regenerative braking system is activated by this sequence of occurrences, the motor generates power which is returned to the batteries.

If the operator tries to override the electronic brake feature by moving the direction selector or key switch to another position, the vehicle rapidly decelerates.

Pedal-Up Braking

Pedal-Up Braking is regenerative braking that occurs when the accelerator pedal is released while the vehicle is moving.

Example: If both of the following events occur:

- The vehicle is being driven down a slope
- The accelerator pedal is released

The Pedal-Up Braking feature decreases speed until the vehicle stops or the accelerator is applied. The warning beeper will not activate. When Pedal-Up Braking is activated by this sequence of occurrences, the motor generates power which is returned to the batteries.

High Pedal Disable Feature

High Pedal Disable prevents acceleration if the key switch is turned on while the accelerator or brake are pressed. To reset the controller after a High Pedal Disable, place both feet on the floor, then press the accelerator.

STARTING AND STOPPING THE VEHICLE

All vehicles have an *interlock system* that disables the controller and prevents operation or towing of the vehicle while the charger is connected. Remove the charger plug from the receptacle and correctly store the cable before moving the vehicle.

1. Sit in the driver's seat.
2. Insert the key and turn the key switch to the desired direction (F or R).

NOTICE **When the direction selector is moved to the reverse position, a warning alarm will activate to indicate that the vehicle is ready to run in reverse.**

3. Slowly press the accelerator pedal to start the motor.
4. When the accelerator pedal is released, the motor decreases the speed of the vehicle. To stop the vehicle more quickly, press the brake pedal.
5. Turn the key to the OFF position and remove the key from the switch before exiting the vehicle.

Starting on a Hill

The IntelliBrake™ (parking brake) will activate automatically when the vehicle stops. To start the vehicle on a hill, press the accelerator pedal and the parking brake will be released.

ACCELERATING

WARNING Accidental movement of the accelerator pedal can cause the vehicle to suddenly move and cause severe injury or death.

Make sure that the key switch is in the OFF position any time the vehicle is parked.

1. Move the key switch to the F or R position.
2. Apply slow and steady pressure to the accelerator pedal to start the motor and accelerate the vehicle. When the accelerator pedal is released, the motor decreases the speed of the vehicle.

BRAKING

WARNING When carrying cargo or towing a vehicle or trailer, the weight of the load will increase the braking distance required to slow or stop the vehicle. Not allowing for increased braking distance under load can cause an accident or injury.

1. Release the accelerator pedal completely.
2. Press the brake pedal to slow vehicle speed or stop the vehicle completely.
3. Practice slowing and stopping using the brake to become familiar with the controls.

Coasting

The vehicle has a braking feature (pedal-up) that decreases the speed when the accelerator pedal is released. The feature continues to decrease the speed until the vehicle stops. Press the brake if you need to decrease speed or stop the vehicle quickly.

DRIVING PROCEDURE

1. Perform the daily inspection on page 15.
2. Sit in the driver's seat.
3. Check the surroundings and determine the path of travel.
4. Insert the key into the key switch and turn the key switch to the desired position (F or R).
5. Slowly press the accelerator pedal to start the motor and accelerate.
6. Practice maneuvering the vehicle using the accelerator and brake pedals. Drive slowly and cautiously until you are comfortable with the controls.

NOTICE **Use only your right foot for both the accelerator and brake, keeping your heel on the floor while resting your left foot on the floorboard for stability and to prevent simultaneous pressing of pedals.**

DRIVING WITH PASSENGERS

- Do not allow more than one passenger in the forward facing seat.
- Do not allow more than two passengers in the rear facing seat.
- Do not allow a passenger to ride anywhere on the vehicle except the passenger seat(s).
- Operate at speeds that matches your skill level, the passenger's safety and comfort, and the operating conditions. Avoid unexpected or aggressive maneuvers that could cause discomfort or injury to any passengers.
- Handling characteristics can change with the added weight of passengers. Allow more time and distance for braking.

SLIPPERY SURFACES

WARNING Skidding or sliding can cause a loss of control. Skidding or sliding can cause rollover if tires have lost traction, then regain traction suddenly. When operating on slippery surfaces, travel at reduced speed to help maintain control of the vehicle.

When operating in conditions such as ice, water, loose gravel, or freezing temperatures, follow these guidelines:

- Do not operate on excessively rough, slippery, or loose terrain.
- Slow down before entering potentially slippery areas.
- Maintain a high level of alertness.
- Carefully evaluate the path of travel and avoid quick, sharp turns.

- Correct a skid by turning the steering wheel in the direction of the skid. *Never apply the brakes during a skid.*

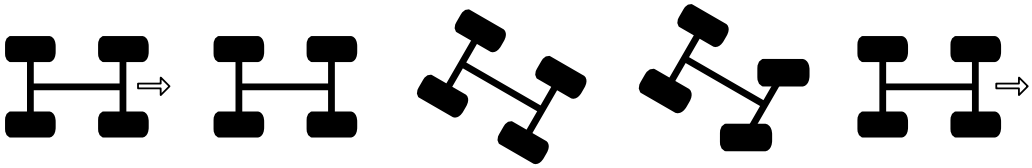

DRIVING UPHILL

When driving up a hill, follow these guidelines:

- Drive straight up the hill.
- Avoid excessively steep hills.
- Check the terrain before driving up a hill. Do not try to climb hills that have excessively slippery or loose surfaces.
- Drive at a steady rate of acceleration and speed.
- Do not drive over the crest of a hill at high speed. An obstacle, sharp drop, or another person or vehicle could be on the other side of the hill.
- Do not attempt to drive up a hill that is beyond your skill level.

TRAVERSING HILLSIDES

WARNING Traversing a hillside is not recommended. Improper procedure can cause loss of control or a rollover. Avoid crossing the side of a hill unless absolutely necessary. If traversing a hillside is unavoidable, check the terrain and determine if it can be accomplished safely. Do not proceed if the terrain is beyond the vehicle or driver's ability.

If traversing a hillside is unavoidable, follow these guidelines:

•Drive slowly.

- Use extreme caution.
- Avoid crossing the side of a hill that has a slippery surface.
- Avoid crossing the side of a steep hill.
- When traversing a hillside that has soft terrain, it may be necessary to steer slightly uphill to keep the vehicle traveling in a straight line.
- If you feel that you are losing control of the vehicle, steer downhill if possible to regain control.

DRIVING DOWNHILL

WARNING When carrying cargo or towing a vehicle or a trailer, the weight of the load will increase the braking distance required to slow or stop the vehicle. Not allowing for increased braking distance under load can cause an accident or injury.

When driving down a hill, follow these guidelines:

- Avoid excessively steep hills.
- Check the terrain carefully before descending any hill.
- Never drive down hills with excessively slippery or loose surfaces.
- Drive slowly.
- Drive straight down the hill. Avoid descending the hill at an angle that could cause the vehicle to lean sharply to one side.
- Apply light and constant pressure to the accelerator to maintain slow speed and control of the vehicle.

DRIVING IN REVERSE

When driving in reverse, follow these guidelines:

- Check that the area behind the vehicle is clear of obstacles and people.
- Check left and right fields of vision before driving in reverse.
- Drive in reverse slowly.
- Press the brakes lightly for stopping.
- Accelerate slow and steady.
- Avoid turning at sharp angles.

PARKING THE VEHICLE

WARNING To avoid unintentional movement of the vehicle that could result in severe injury, vehicle damage or damage to surrounding objects, park the vehicle on a flat surface. If parking on an incline is unavoidable, chock the wheels to keep the vehicle from rolling.

NOTICE **When parking the vehicle in cold climates (0°C, 32°F), the car should be stored in an enclosed garage.**

1. Press the brake to stop the vehicle.
2. Turn the key switch to the OFF position.
3. Remove the key from the vehicle to prevent unauthorized use.
4. If parking on an incline, chock the wheels on the downhill end to prevent the vehicle from rolling.

TOWING

WARNING Attach a trailer to the tow hitch only. Attaching the trailer at any other location can cause a loss of vehicle control.

Do not attach unapproved accessories to the hitch receiver. Towing and hitch mounted accessories can change the performance qualities of the vehicle and cause dangerous handling characteristics, possible rollover, or vehicle damage.

Do not attempt to tow with a vehicle not equipped with rear hitch.

When towing a load, follow these guidelines:

- Do not tow more than the recommended towing weight shown in the following table.

VEHICLE TOWING (0% - 20% GRADE)	
Maximum Vehicle Weight Capacity	800 lb (363 kg)
Maximum Gross Trailer Weight	500 lb (227 kg)

- Do not exceed the maximum vehicle weight capacity (includes weight of operator, passenger, cargo, accessories, and trailer tongue weight).
- The range of motion of the trailer is limited by the ball and hitch. Do not tow a trailer on rough terrain.
- Drive slowly and carefully. Towing may negatively impact vehicle handling, stability, braking, battery range, durability, and performance. Do not tow a trailer more than 19.5 MPH (31.4 km/h).
- Towing a load increases braking distances required for slowing or stopping the vehicle.
- Do not attach unapproved accessories to the hitch receiver.
- Trailer tongue weight must be between 8% and 12% of the gross trailer weight for safe towing.
- Avoid parking on an incline.
- Do not operate on a grade exceeding 20%.
- Always secure the cargo.

VEHICLE MAINTENANCE

MAINTENANCE SAFETY

WARNING To prevent serious injury or death, follow the procedures and comply with the safety information in this manual while performing vehicle service or maintenance.

Use the tools shown in the tool list and wear the specified safety equipment when performing vehicle service or maintenance.

Remove all jewelry before servicing the vehicle.

Do not allow loose clothing or hair to contact the moving parts.

Do not touch hot objects.

Before you disconnect or connect a battery module or any other wires, make sure that the key switch is in the OFF position.

The drive wheels must be lifted and supported on jack stands before you do any service to the powertrain when the motor is in operation.

Support the vehicle with jack stands. NEVER get under a vehicle that is only supported by a jack. Lift the vehicle according to the instructions on page 23.

Wear a face shield when working around battery modules.

Be careful when working around battery modules, using solvents, or compressed air.

Use insulated tools within the battery area to prevent blowing the internal BMS fuse.

To prevent the risk of battery explosion, keep all flammable materials, open flames, or sparks away from battery modules.

Maintain constant awareness that some components are heavy, spring loaded, corrosive, explosive, can cause high amperage, or get extremely hot.

After making repairs or performing maintenance, test the vehicle in a safe area that is free from vehicle and pedestrian traffic.

NOTICE **To decrease the risk of damage to the controller or motor, move the run/tow switch to the TOW position before towing the vehicle.**

After connecting a battery or any other wires, wait a minimum of 30 seconds before moving the switch to the RUN position.

SCHEDULED MAINTENANCE

Consistent inspection, adjustment and lubrication of some components are necessary to maintain your vehicle so that it remains in safe and reliable condition. Refer to the SCHEDULED MAINTENANCE CHART on page 22 for detailed requirements.

Inspect, clean, lubricate, adjust and replace parts as necessary. Use OEM or equivalent replacement parts.

Record the maintenance items performed, along with details in the MAINTENANCE LOG beginning on page 37.

NOTICE **Service and adjustments are important for safe and reliable vehicle operation. If not familiar with safe service and adjustment procedures, have your dealer perform the operations.**

SCHEDULED MAINTENANCE CHART

Perform all services at the maintenance interval reached first.

ITEM	INTERVAL (perform at interval that comes first)		REMARKS	PAGE
	HOURS	CALENDAR		
Overall vehicle condition	Pre-ride		Inspect.	
Battery Module	Daily		Charge daily after use.	32
Steering	Pre-ride		Check for smooth and free operation.	
Front suspension	Pre-ride		Inspect. Check for leaks and loose or missing hardware.	
Rear suspension	Pre-ride		Inspect. Check for leaks and loose or missing hardware.	
Tires	Pre-ride		Check condition and pressure.	25
Wheel lug nuts	Pre-ride		Check for loose or missing.	26
Accelerator	Pre-ride		Check for smooth operation.	
Brake system	Pre-ride		Check for smooth operation and acceptable stopping distance.	27
Frame hardware	Pre-ride		Check for loose or missing.	
Headlights and taillights	Pre-ride		Check operation. Replace LED assemblies as needed.	26
Reverse warning alarm	Pre-ride		Check operation.	
Switches	Pre-ride		Check operation.	
Fluid leakages	Pre-ride		Inspect entire vehicle for leaks.	
Parking brake (e-brake)	Pre-ride		Check for correct hold on flat ground and inclines.	
Brake pads	10	Monthly	Inspect. Replace as needed.	
Charger receptacle	20	Monthly	Clean connections.	
Accelerator	20	Monthly	Check for smooth operation.	
Wiring	20	Monthly	Inspect for loose connections, broken or missing insulation.	
Steering	20	Monthly	Check for excess play, loose or missing hardware.	
Tie rods	20	Monthly	Check for excess play, bent rods, loose or missing hardware.	
Front suspension	20	Monthly	Inspect strut for leaks. Check hubs and kingpins, for excessive play, worn bushings, loose or missing hardware.	
Rear axle	20	Monthly	Check for leakage; add oil as required.	
Brakes	20	Monthly	Check for smooth operation and acceptable stopping distance.	
Battery module	20	Monthly	Inspect for damage with battery cover* on	32
Hydraulic brake fluid	20	Monthly	Check fluid level.	28
General lubrication	50	3 Months	Lubricate all fittings, pivots, cables, etc. where required.	23
Front wheel alignment	60	3 Months	Check for unusual tire wear.	
Rear Suspension	60	3 Months	Check for shock oil leakage, worn bushings, loose or missing hardware.	
Battery module	100	1 Year	Remove battery cover* from battery and inspect for damage.	32
Hydraulic brake fluid	100	1 Year	Replace fluid.	Dealer
Rear axle	500	5 years	Replace fluid.	
Motor coupling	20,000 Amp Hours	5 years	Add anti-seize compound (approx. 1 tbsp).	

*if equipped

RECOMMENDED LUBRICANTS AND FLUIDS

Check and lubricate all components at the intervals shown in the SCHEDULED MAINTENANCE CHART beginning on page 22.

ITEM	CAPACITY	LUBRICANTS/FLUIDS	PART NUMBER
Rear axle oil	25 oz. (0.7 L)	Mobil 424	603967
Rear axle oil	2.0 oz (59 mL)	Friction Modifier	611242

REPLACEMENT OF MAINTENANCE ITEMS

These items or their equivalents can be purchased through an authorized dealer, directly from the manufacturer or any other qualified source.

ITEM	PART NUMBER
58V, 10A Mini Fuse	636455G22
32V, 15A Mini Fuse	636455G13
32V, 5A Mini Fuse	636455G10
32V, 10A Mini Fuse	636455G12
Throttle Resistor	662004
12V, 20A Relay	643691
LED Headlight Assembly	651411G03
LED Tail Light Assembly	10014910

LIFTING THE VEHICLE

WARNING Read and comply with all of the following warnings and lifting procedures to prevent the possibility of the vehicle falling and causing serious injury or death.

For some maintenance procedures, it is necessary to lift the vehicle. To safely lift the vehicle, it is important follow the procedures and safety information provided.

WARNING The vehicle must be on a firm and level surface.

Be constantly aware that the vehicle is not stable during the lifting process.

Place jack and jack stands only in areas indicated.

Make sure the vehicle is stable on jack stands before getting underneath.

Never get under a vehicle while it is on a jack only.

Put wheel chocks in front of and behind the wheels that are not being lifted.

Do not allow anyone on the vehicle when it's being lifted or on jack stands.

Lift and support the drive wheels on jack stands before performing any service to the powertrain while the motor is in operation.

Tools

- jack
- jack stands (4)
- wheel chocks

Lifting Front

1. Chock the rear wheels to keep the vehicle from rolling backward.
2. Put a jack under the center of the front axle.
3. Raise the vehicle with the jack.
4. Install jack stands under the front frame cross member as shown.
5. Lower the vehicle until it rests on the jack stands.
6. Remove the jack.
7. Confirm that the vehicle is stable on the jack stands before proceeding with any service.

Lifting Rear

1. Chock the front wheels to keep the vehicle from rolling forward.
2. Put a jack under the center of the receiver hitch.
3. Raise the vehicle with the jack.
4. Install jack stands under each end of the rear axle.
5. Lower the vehicle until it rests on the jack stands.
6. Remove the jack.
7. Confirm that the vehicle is stable on the jack stands before proceeding with any service.

Lowering Vehicle

1. Make sure chocks are still in place on any wheels that remain on the ground.
2. Put the jack in the same location that was used to raise the vehicle.
3. Raise the vehicle enough to remove the jack stands. Remove the jack stands from underneath the vehicle.
4. Slowly lower the vehicle to the ground and remove the jack.

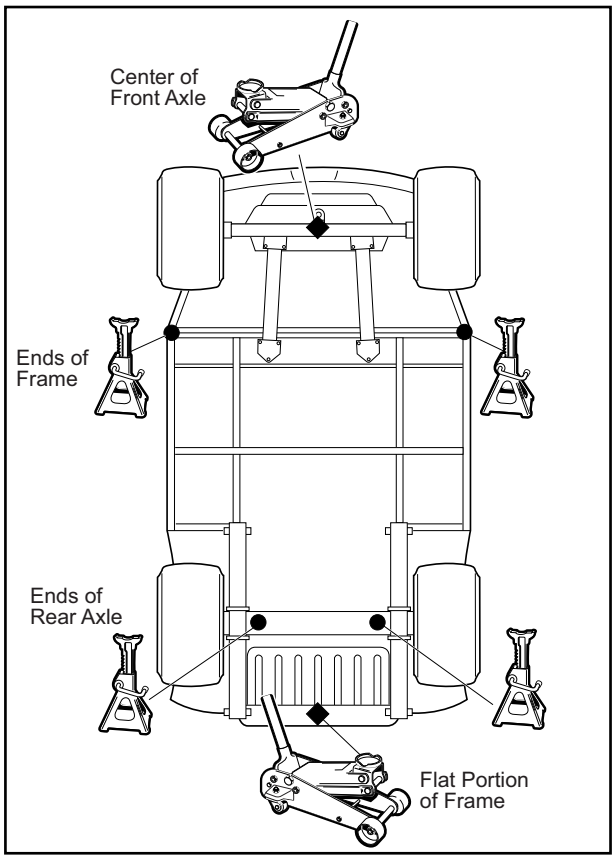

VEHICLE CLEANING AND CARE

Keeping your vehicle clean is not only beneficial to its appearance but can also help extend the life of various components.

Washing the Vehicle

NOTICE

Do not use a pressure washer to wash the vehicle. High water pressure can damage components.

Some products, including insect repellents and chemicals, will damage plastic surfaces. Do not allow these types of products to contact the vehicle.

Do not use a pressure washer to clean the vehicle.

- Use an automotive type cleaner or mild soap to wash the vehicle. Harsh cleaners can scratch the finish.
- Use clean or new cloths and pads for washing. Reused cloths and pads can contain dirt particles that will scratch the finish.
- Use a sponge or soft brush and a soap/water solution to clean the vinyl seats. Rinse with clean water.
- Use an automotive type wash cloth to wash the body of the vehicle. To prevent the soap from drying on the vehicle, rinse with clean water frequently.
- Clean the windshield with water and a clean cloth. Remove small scratches with a plastic polish.
- Clean the bottom of the vehicle where mud or dirt can collect. Loosen any packed sediment to help with removal. Be careful not to damage the paint.
- Dry the vehicle with a chamois before the water dries to prevent water spots.

Polishing the Vehicle

- Do not use medium to heavy duty compounds on the finish. Use wax that is for clear coat automotive finishes only. Do not apply wax or polish to matte finish surfaces.
- Use clean or new cloths and pads for polishing. Old or reused cloths and pads can contain dirt particles that will scratch the finish.

TIRES

Follow the tire maintenance procedures as instructed in this manual and on the labels on the vehicle.

Always use approved size and type of replacement tires. See VEHICLE SPECIFICATIONS on page 35.

WARNING Worn, improperly inflated, improper sized, or incorrectly installed tires will affect vehicle handling and could cause an accident resulting in severe injury or death.

Inflate all tires to the same pressure. Operating with unequal or incorrect pressure can adversely affect steering and handling and could cause an accident resulting in severe injury or death.

To decrease the risk of tire explosion, do not exceed the tire inflation rating on the tire sidewall. Make sure the tires are properly inflated at all times of operation.

To decrease the risk of tire explosion, inflate small amounts of air into the tire at intervals to allow the beads to seat properly. Because of the low volume of the small tires, over inflation can occur in seconds. Never exceed the tire inflation pressure rating on the tire sidewall when seating a bead. Protect your face and eyes when you remove a valve core.

When you remove the wheels, use only sockets made for impact wrenches to decrease the risk of injury by a broken socket.

Do not use tires with low rated pressure. Do not use tires that have a recommended tire inflation pressure less than the tire inflation pressure in Tire Pressure on page 25.

Do not over inflate the tires. Excess pressure can cause the tire to separate from the wheel or cause a tire explosion.

Tire Pressure

Maintaining correct tire inflation pressure is essential for safe vehicle operation. You can vary the inflation pressure, within the recommended range to suit the condition of the terrain.

TIRE PRESSURE RANGE	TERRAIN CONDITIONS	RECOMMENDATION
18 - 22 psi (124 - 152 kPa)	hard surfaces or pavement	Inflate to higher pressure within the range; never exceed maximum pressure indicated.
	soft terrain or turf	Inflate to lower pressure within the range to reduce potential damage to the terrain or turf.

Tire Repair

NOTICE **Tire repairs are not covered under the vehicle warranty.**

Tools

- lug wrench, 3/4”
- impact wrench
- impact socket, 3/4”
- torque wrench, ft.lbs.

NOTICE **Tire plug tools and plugs are available at automotive outlets. The tire does not have to be removed from the wheel to install the tire plug.**

Use a tire plug to repair small holes in the tread part of the tire. For large holes or holes/cuts in the tire sidewall, the tire must be replaced.

1. Remove the wheel from the vehicle. See Wheel Removal on page 26.
2. Locate the leak in the tire.
   a. If the tire is very low or flat, fully inflate the tire.
   b. Brush soapy water over the surface of the tire. Air bubbles will be visible where air is leaking from the tire.
   c. Mark the hole with chalk.
3. Install the plug according to the manufacturer’s instructions.
4. Install the wheel on the vehicle. See Wheel Installation on page 26.
5. Fully inflate the tire. See Tire Pressure on page 25.

Tire Replacement

Tire replacement requires a tire mounting machine and must be done by a qualified tire center or your dealer.

WHEELS

WARNING Worn, improperly inflated, improper sized, or incorrectly installed tires will affect vehicle handling and could cause an accident resulting in severe injury or death.

CAUTION To decrease the risk of component damage, do not tighten the lug nuts to more than the torque specified below.

Check lug nuts for tightness at the intervals indicated in the SCHEDULED MAINTENANCE CHART on page 22.

Wheel Removal

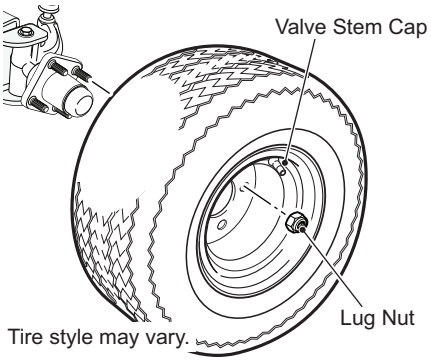

Tools

- lug wrench, 3/4”
- impact wrench
- impact socket, 3/4”
- torque wrench, ft.lbs.

1. Lift the vehicle. See LIFTING THE VEHICLE on page 23.
2. Remove the lug nuts.
3. Remove the tire from the vehicle.

Wheel Installation

Lug Nut Torque	50 - 85 ft.lbs. (68 - 115 Nm)

NOTICE **Always install lug nuts using a cross sequence pattern to ensure even seating of the wheel against the hub.**

Lug Nut Tightening Pattern

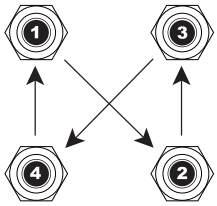

1. Install the wheel on the hub with lug nuts. Make sure the valve stem is to the outside.
2. Finger tighten the lug nuts.
3. Using the tightening pattern shown at right, tighten the lug nuts to 50 - 85 ft.lbs. (68 - 115 Nm). Tighten in increments of 20 ft. lbs. (27 Nm).

LIGHTS

Clean the lights frequently to maximize visibility.

WARNING Do not operate vehicle at night or in low light if any lights are not properly and fully functioning. Poor lighting reduces visibility that could cause an accident resulting in severe injury or death.

Since light components can get hot during operation, allow lights to cool before servicing to prevent burns to the skin.

Headlight Replacement

1. Disconnect the headlight harness from the headlight.
2. Remove the screws securing the headlight assembly to the headlight bezel.
3. Remove the headlight assembly and install the new one with screws.
4. Connect the harness to the headlight assembly.

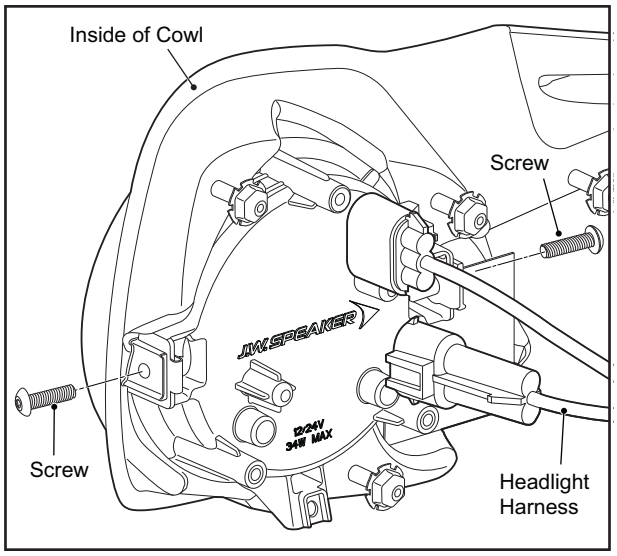

Tail Light/Brake Light Replacement

1. Disconnect the tail light harness from the tail light.
2. Press the tail light assembly out of the grommet by pushing on the back of the assembly.
3. Press the new tail light assembly into the grommet.
4. Connect the harness to the tail light assembly.

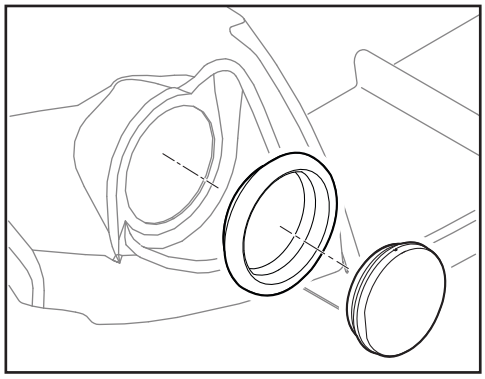

FUSE REPLACEMENT

NOTICE **Have the vehicle inspected by your dealer if fuses continue to blow after they have been replaced.**

1. Lift the rear seat bottom to access the PDM.
2. Open the PDM to access the fuses.
3. Remove the old fuse and replace with a new fuse of the same type and size.
4. Fuses are available from a local dealer or the manufacturer.

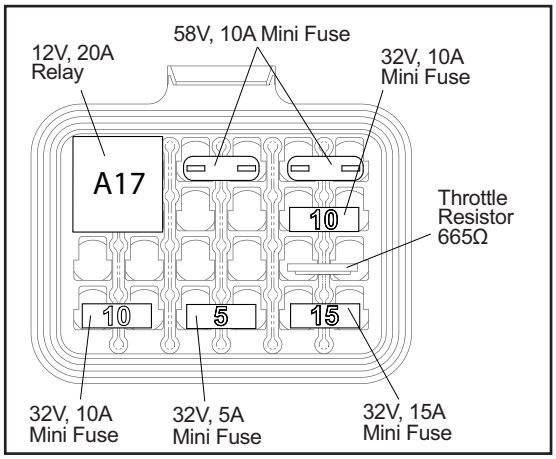

CONTROLLER SYSTEM TEST

At monthly intervals, test the controller by allowing the vehicle to roll down an incline with the accelerator pedal released. Braking force should be felt at approximately 2 mph (3 kph) indicating that the system is functioning. If vehicle speed continues to rise, apply the brake and have vehicle inspected by a trained mechanic.

REAR AXLE

The only maintenance necessary for the first five years is the inspection of the rear axle for lubricant leakage. Unless leakage is visible, the lubricant needs to be replaced after five years. Refer to the service manual for the fluid replacement procedure.

Change the axle oil at the intervals indicated in the SCHEDULED MAINTENANCE CHART on page 22. The drain plug is located at the bottom of the rear axle housing.

Checking the Lubricant Level

Clean the area around the check/fill plug and remove the plug. The correct lubricant level is just below the bottom of the threaded hole. If lubricant is low, add as required. Add slowly until lubricant starts to seep from the hole. Install the check/fill plug. In the event that the lubricant is to be replaced, the oil pan must be removed or the oil siphoned through the check/fill hole.

HYDRAULIC BRAKES

WARNING Always inspect the pedal travel before operating a vehicle to confirm some brake function is present.

Hydraulic Brake Fluid

WARNING When adding or changing brake fluid, always use brake fluid from an unopened bottle. After opening a bottle of brake fluid, discard the unused portion. Do not store or use from an opened bottle. Brake fluid rapidly absorbs moisture from the air. The moisture causes the boiling temperature of the brake fluid to drop. This can lead to premature brake fade and the risk of accident that can result in severe injury or death.

In addition to the scheduled maintenance interval for changing the brake fluid, the brake fluid must also be changed in the following conditions:

- fluid becomes contaminated
- fluid level falls BELOW the MIN mark
- the type/brand of fluid in reservoir is unknown

Replace the fluid according to instructions in the vehicle service manual or take to your dealer.

Check Brake Fluid Level

NOTICE **The brake fluid reservoir is under the cowl at the passenger's side front wheel.**

1. Park vehicle on a level surface.
2. Check the brake fluid level at the reservoir. The fluid level should be between the upper MAX and lower MIN lines.
3. If the level is below the MAX line, add brake fluid:
   a. Clean any dirt and debris from around the reservoir cap.
   b. Remove cap from reservoir.
   c. Add fluid until it reaches the MAX line.
   d. Reinstall cap.
   e. Clean any spilled brake fluid from the area.
   f. Dispose of any unused fluid.
4. Press and hold the brake pedal fully down for a few seconds.
5. Check for fluid leakage around the fittings.

TRANSPORTING THE VEHICLE

WARNING Do not ride or allow other people on a vehicle being transported on a trailer or being towed with another vehicle.

Hauling the Vehicle

WARNING Loose cargo or vehicle components can fly off when the vehicle is being transported. Secure or remove all cargo. Inspect the vehicle for loose components prior to transport.

Do not allow anyone to ride in a vehicle being transported on a trailer. Remove the windshield before you transport a vehicle on a trailer.

- If the vehicle is being hauled on a trailer or truck below highway speeds, check that canopy top hardware is tight and there are no cracks in the canopy top at the mounting points.
- The rated capacity of the hauling trailer or truck must be more than the weight of the vehicle and load plus 1000 lbs. (454 kg). See VEHICLE SPECIFICATIONS on page 35 for the weight of the vehicle.

1. Drive the vehicle onto the trailer or truck.
2. Ensure the electric parking brake is engaged.
3. Turn the key to the OFF position. To prevent loss of the key, remove it from the ignition switch.
4. Secure the seats.
5. Secure the vehicle to the trailer or truck with tie downs, straps or ropes.

Towing the Vehicle

NOTICE **This vehicle is equipped with an IntelliBrake™ for parking. When the vehicle is stopped, the parking brake is automatically set. The IntelliBrake™ is released when the vehicle is in F (forward) or R (reverse) and the accelerator is pressed. The IntelliBrake™ is also released when the run/tow switch is in the TOW or Ⓟ (on European Models) position with the key switch turned to N (neutral). The IntelliBrake™ must be manually released in cases of total power loss using the procedure below.**

WARNING Only tow the vehicle for recovery purposes. Before towing, turn the key switch to N and move the run/tow switch to the TOW position. Ensure brakes and steering are operable.

Always have a person driving the vehicle to steer and operate brakes when it is being towed. Do not tow the vehicle above 5 mph (8 kph). Failure to abide by these instructions could cause harm to vehicle and persons involved.

NOTICE **This vehicle is equipped with an automatic parking brake. When the vehicle is stopped, the parking brake is automatically set. The IntelliBrake™ releases when the vehicle is in F or R and the accelerator is pressed. The IntelliBrake™ is also released when the run/tow switch is in the TOW position with the key in N.**

MANUAL RELEASE OF INTELLIBRAKE™

WARNING When the IntelliBrake™ is released, the vehicle will roll freely if not on level ground. Always chock the wheels to prevent unintended movement.

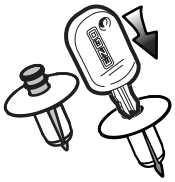

In case of total power loss and the run/tow switch does not release the IntelliBrake™, use the instructions under the controller splash shield. Chock the tires to prevent the vehicle from moving when the brake is released.

To read the instructions, remove three re-usable plastic rivets that secure the controller splash shield to the body and the controller. To remove these rivets, press the center of the rivet with the vehicle key. When the center pin goes into position, the rivet can be removed. Repeat the procedure for each remaining rivet. Turn the splash shield over to read the instructions.

Make sure that the key switch is in the OFF position and chock the tires to prevent the vehicle from moving, then do the following:

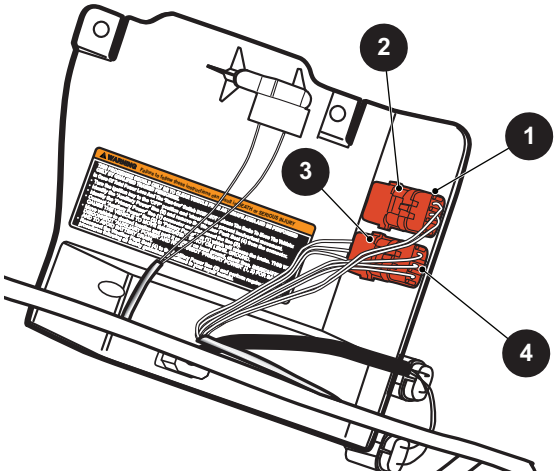

1. Locate the ‘Auxiliary Power’ line (3) and remove the weather pack seal (4) from the connector.
2. Locate the ‘Primary Power’ line connector (1) and disconnect it from line (2).
3. Connect the ‘Auxiliary Power’ line (3) to the ‘Primary Power’ line (1) which releases the brake.
   If the wheels are not chocked and the vehicle is not on flat ground, the vehicle will move immediately.
4. Move the vehicle to desired, safe location and chock the tires immediately.
5. Disconnect the ‘Auxiliary Power’ line (3) from the ‘Primary Power’ line (1).
6. Connect the ‘Primary Power’ line (1) to line (2).
7. Replace the weather pack seal (4) on the ‘Auxiliary Power’ line connector (3).

8. To reinstall the controller splash shield, position the splash shield by aligning the mounting holes with the holes in the body, push the center pin of each rivet upward so that the top of the pin is above the rivet head.
9. Place a rivet in each mounting hole of the controller splash shield and push down on the center pin until the top of the pin is flush with the rivet head.

BATTERY MAINTENANCE

There is no maintenance required for the battery module other than the periodic inspections indicated in the SCHEDULED MAINTENANCE CHART on page 22. Charge the battery using only the OEM approved Lithium-Ion battery charger.

LITHIUM-ION BATTERY MODULE SAFE OPERATION

Improper handling of battery module and electrical components can result in fire, which can cause serious injury or death and damage to property. Read, understand and obey the following warnings.

WARNING Do not open the battery module. Do not disassemble or modify the design, including the electrical circuit.

Do not attempt to remove battery module or battery cables. All repairs or related services must be performed by an authorized service facility.

All tools used in or around the battery module area should be insulated.

Do not cause a short to the power terminal (P+, P-, B+, B-) with a metallic object.

Avoid using, storing or leaving in a high humidity, high dust or corrosive gas atmosphere.

To prevent the risk of explosion or fire, keep all flammable materials or sparks away from the batteries.

Do not leave battery near a fire or heat source.

Do not throw battery into a fire.

Do not apply heat to any part of the battery module.

Do not put in a microwave oven, dryer or high-pressure container.

Do not attempt to operate the vehicle or charge the battery module at temperatures above 140°F (60°C) or below -4°F (-20°C).

Do not immerse battery module in water or leave wet.

Do not pressure wash or otherwise apply water or any other chemical, including battery terminal protectant, insect repellent, etc. to the battery module. To clean, use only compressed air, a dry rag or non-metallic brush.

If battery module is found to be damaged or deformed, it must be replaced immediately. Exposing a damaged battery module to water or any other chemical may result in fire.

Do not puncture the battery module with sharp objects such as needles or screwdrivers.

Do not strike the battery module with a hammer or heavy weight.

Do not step or stand on the battery module.

Do not throw or drop the battery module on hard surfaces.

Do not heat any part of the battery module with heated objects such as soldering irons. Do not solder directly on the battery module.

Keep the battery module away from static electricity.

If battery module becomes abnormally hot, an odor is detected or if discoloration, deformation, or other abnormal conditions are detected during usage, charge, or storage, remove vehicle from service and evacuate the area.

Keep away from vehicle if fire, leakage or foul odors are detected. If liquid contacts your skin or clothing, wash thoroughly with fresh, running water immediately. If any liquid contacts your eyes, do not rub. Wash with clean, running water and seek medical assistance immediately.

If battery terminals are contaminated, wipe with a dry cloth. Do not use water to clean.

BATTERY CHARGING

The battery charger is designed to completely charge the battery pack. If the battery pack is severely discharged the charger will indicate a fault. The automatic charger determines the correct length of charge for the battery pack and turns off when the battery pack is charged. Always refer to the instructions supplied with the charger. See the Appendix section in the back of this manual for charger operating instructions.

The battery management system (BMS) and charger cooperate to make sure that charging occurs at the proper rate for the battery temperature. When the battery charger is connected to the vehicle, it will determine the charge rate based on the battery temperature. The charger will operate at the rates shown in the table below.

The BMS will adjust the charge rate based on the temperature of the batteries.

Use only the OEM approved Lithium-Ion battery charger for your vehicle. See charger operating instructions in the Appendix section.

1. Turn the key to the OFF position and remove it from the vehicle.
2. Inspect the charger cord for cracks, frayed wires or loose connections. If damaged, replace it.
3. Inspect the vehicle charger receptacle and charger plug for dirt, debris or damage. Clean if necessary and replace immediately if damage is found.
4. Refer to the following chart for guidelines and connect the charger to a receptacle:

CHARGER NAME	NUMBER OF VEHICLES	INPUT AC VOLTAGE	RECOMMENDED DEDICATED CIRCUIT
ELiTE World Charger	1	110/120 or 220	15A Breaker
ELiTE Light Charger 350 (incl. International)	3	120V	15A Breaker
	4	120V	20A Breaker
	4	220V	15A Breaker
	5	220V	20A Breaker
ELiTE On Board Rapid Charger	1	110/120 or 220	15A Breaker
ELiTE Light World Charger 700	1	120V	15A Breaker
	2	120V	20A Breaker
	3	220V	15A Breaker
	4	220V	20A Breaker

5. Connect the charger to the vehicle receptacle.

When the battery pack is finished charging, disconnect the charger cord from the vehicle. If disconnecting before the charge cycle is complete, it is recommended that the charger be disconnected from the wall receptacle first, then unplug the charger from the vehicle receptacle.

AC Voltage

The battery charger output is directly related to the input voltage. If the vehicle receives an incomplete charge in a normally adequate time period, low AC voltage can be the cause. Consult an electrician if necessary.

BATTERY INSPECTION

Periodic battery inspections are required. Refer to the SCHEDULED MAINTENANCE CHART on page 22 for service intervals.

Inspect battery module for cracks around the perimeter of the case and any other visible damage. If cracks or damage is detected:

- do not charge the vehicle until battery has been replaced
- remove vehicle from service
- park vehicle outdoors, at least 15 feet away from structures or other vehicles
- contact your authorized dealer or the vehicle manufacturer for replacement information

Battery Cover Removal

The battery cover must be removed from the battery module for the 100 hour/ yearly inspection. The battery cover must be reinstalled after inspection is complete.

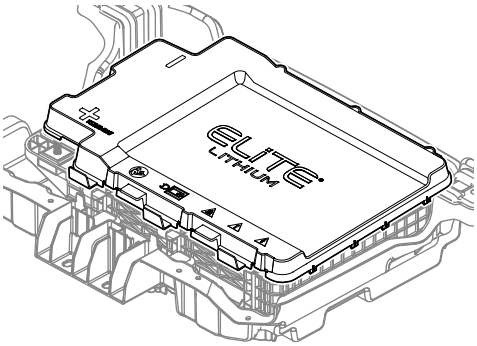

Battery covers vary in appearance; this is shown for reference only.

BATTERY SHIPPING

In the rare event that batteries require shipment, contact the vehicle manufacturer for shipping and handling instructions. Use the Technical Assistance & Warranty number located on the back of this publication.

BATTERY PROLONGED STORAGE

CAUTION Improper storage may damage, destroy, or cause permanent loss of battery pack capacity. Do not exceed storage time or temperature limits. The battery pack must be charged to the correct level before storage. Storing fully depleted battery packs will make them permanently unusable.

Storage Preparation

The optimum storage temperature range is between 65°F and 82°F (18°C and 28°C)

- Charge the battery module based on climate during storage period.
  - In cold climates, fully charge the battery pack. Make sure that the charging operation is complete and there are no faults displayed on the charger. The green light on the charger should be on which indicates that the charge cycle is complete.
  - In hot climates, store the vehicle with a 30% to 50% charge of battery pack capacity.
- Turn the key switch to the OFF position and remove the key from the switch.
- Check the run/tow switch under the seat, make sure it is set in the RUN position.
- Turn off all accessories.

The storage time for properly charged Lithium-Ion batteries supplied with this vehicle varies based on the ambient temperature.

Temperature	Length of Storage Time
-22°F to -4°F (-30°C to -20°C)	One month at 100% battery charge, all accessories turned off.
-4°F to 113°F (-20°C to 45°C)	Six months at 100% battery charge, all accessories turned off.
113°F to 140°F (45°C to 60°C)	One month at 30% - 50% charge, all accessories turned off.

Setting State of Charge (SOC)

The optional SOC meter or the hand held programmer may be used to determine the state of charge of the battery module. If the SOC is below 30%, charge the battery module until the state of charge reaches 50%. The charge cycle may be interrupted by disconnecting the charger from the AC power source first, then from the charging receptacle on the vehicle. If the SOC is above 50%, operate the vehicle until the SOC is below 50%.

During Storage

Check the state of charge every 30 days. If the SOC is below 30%, charge the battery pack until the state of charge reaches 50%.

Extreme Low Temperature Storage

If the ambient temperature is below -4°F (-20°C) DO NOT:

- turn the vehicle key to the ON position
- drive the vehicle

- tow the vehicle
- charge the vehicle
- operate accessories
- turn the lights on (if equipped)

Returning Vehicle to Service

At the end of the storage period, charge the battery pack to 100% before operating the vehicle.

Before charging the vehicle be sure that the ambient temperature is between 14°F (-10°C) and 113°F (45°C) and the vehicle has had time to adjust to the temperature.

BATTERY FAULT DIAGNOSIS

Refer to the charger instructions in the Appendix in the back of this manual.

BATTERY CHARGER MAINTENANCE

- Do not attempt to start the vehicle or charge the battery pack if the vehicle has been stored at or below freezing temperatures.
- Do not spray the battery pack with water. Do not attempt to add water to the battery pack.
- Do not charge the batteries if the ambient temperature is below -4°F (-20°C) or above 113°F (45°C).
- Refer to the appropriate appendix for battery charger operating instructions.

BATTERY DISPOSAL

WARNING Do not dispose or recycle without proper insulation on the battery terminals.

Lithium-Ion batteries are recyclable:

- Return discarded battery modules to distributor or manufacturer for recycling.
- Contact local or state environmental department for disposal information.

NOTICE **When Li-ion batteries are put into a municipal recycling bin, they will end up at a municipal recovery facility (MRF) that is typically equipped to recycle only household paper, plastic, metal, and glass. When this happens, the batteries can become damaged or crushed during processing and may become a fire hazard. It is important to note that the chasing arrow symbol (i.e three arrows forming a triangle) on Li-ion batteries means that these batteries can be recycled at specialized battery recyclers. It does not mean that Li-ion batteries can be placed in municipal/household recycling bins.**

VEHICLE SPECIFICATIONS

LIBERTY

Overall Length	106.25 in (270 cm)
Overall Width	46 in (117 cm)
Overall Height (no Canopy)	52.5 in (133 cm)
Overall Height (with Canopy)	76 in (192 cm)
Wheel Base	77.5 in (197 cm)
Front Wheel Track	38 in (97 cm)
Rear Wheel Track	39 in (99 cm)
Ground Clearance at Differential	7.25 in (18 cm)
Turning Radius	12.85 ft (3.92 m)
Power Source	39.2 - 56.7V Li-ion Battery
Motor Type	AC Induction
HP Peak	11.7 hp (8.7 kW)
HP Continuous	4.4 hp (3.3 kW)
Electrical System	48 V primary, 12 V auxiliary
Battery Quantity and Type	Single, 56.7V Li-Ion Composite Module (Standard Config)
Key or Pedal Start	Pedal
Battery Charger	56.7V 350 W Domestic Charger, 3 m charging cord
Speed Controller	Curtis 1206 AC Controller
Speed (Level Ground)	25 mph (40.2 kph)
Drivetrain	Motor Shaft Direct Drive
Transaxle	Clutch type limited-slip differential with helical gears
Gear Selection	Dash Mounted FNR/key switch
Rear Axle Ratio	16.99:1 (Forward)
Seating Capacity	4-Person
Dry Weight (without battery pack)	966 lb (437 kg)
Curb Weight	1040 lb (471 kg)
Dash / IP Storage Capacity	1123 in³ (18403 cm³)
Vehicle Load Capacity	800 lb (363 kg)
Towing Capacity	500 lb (227 kg)
Outside Clearance Circle	23.9 ft (7.30 m)
Steering	Self-compensating reduction rack and pinion
Front/Rear Suspension	Leaf springs with hydraulic shock absorbers
Brakes	4-wheel hydraulic
Parking Brake	IntelliBrake™ Automatic Electro-Magnetic
Front and Rear Tires	Kruizer KF17 23x7.50R14
Frame	Welded steel with DuraShield™ e-coat and powder coat
Front Body and Finish	Injection Molded TPO

Rear Body and Finish	Thermoform ABS
Some items shown may be optional equipment	
NOISE AND VIBRATION MEASUREMENTS TAKEN ACCORDING TO EN 16990:2020§F.1-F.7, §G.1-G.7 → EN 16990:2020	
Noise	Sound pressure: continued A-weighted equal to or less than 72.5 db (A)
Vibration, WBV	The highest RMS value of weighted acceleration is: 3.93 m/s^2
Vibration, HAV	The highest RMS value of weighted acceleration is: 5.23 m/s2
Uncertainty	The uncertainty of measurement is 1.47 m/s^2

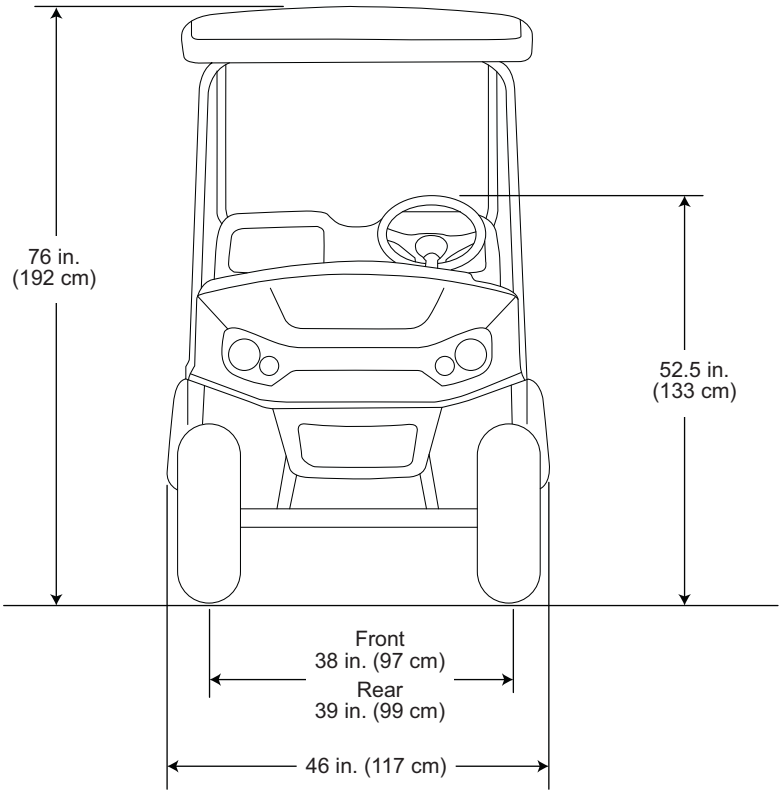

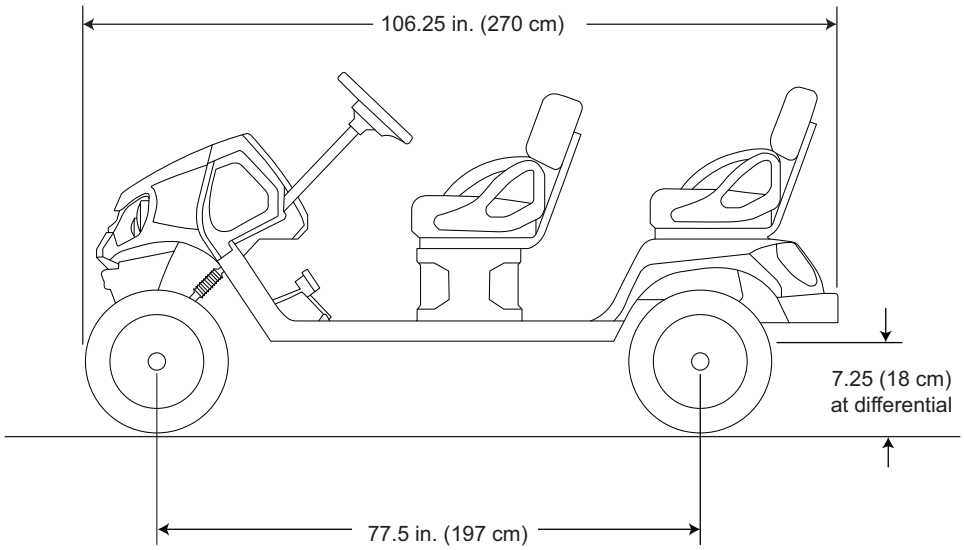

MAINTENANCE LOG

Record periodic maintenance in the following maintenance log.

DATE	MILES (KM) AND HOURS	TECHNICIAN	SERVICE PERFORMED COMMENTS

DATE	MILES (KM) AND HOURS	TECHNICIAN	SERVICE PERFORMED COMMENTS

APPENDIX A

QUIQ CHARGER USER'S GUIDE

QuiQ™

1 kW Industrial Battery Charger

QuiQ Charger - E-Z-GO Product Manual

This manual contains important safety and operating instructions for versions of the Delta-Q QuiQ (Model nos. 913-4830-E3/-E3B/-E5 /-E5B) installed on E-Z-GO brand vehicles. Please read this information before using your QuiQ Charger. For manufacturer contact information and technical support resources, please visit delta-q.com/support

SAVE THESE IMPORTANT SAFETY INSTRUCTIONS - This manual contains important safety and operating instructions – read before using charger.

Warning

Charge only 48 Volt Lithium-Ion type batteries activated by Samsung SDI. Other types of batteries may burst causing personal injury and damage. Never charge a frozen battery. Study the battery manufacturer's specific precautions.

Danger

Risk of electric shock. Connect charger power cord to an outlet that has been properly installed and grounded in accordance with all local codes and ordinances. A grounded outlet is required to reduce risk of electric shock – do not use ground adapters or modify plug. Do not touch uninsulated portions of output connector or uninsulated battery terminals. Disconnect the charger from either the AC supply or from the golf cart, before making or breaking the connections to the battery. Do not open or disassemble charger. Do not operate this charger if the AC supply cord is damaged or if the charger has received a sharp blow, been dropped, or is damaged in any way – refer all repair work to the manufacturer, or qualified personnel. This charger is not intended for use by persons (including children) with reduced physical, sensory or mental capabilities, or lack of experience and knowledge on electrical systems and battery charging, unless they have been given supervision or instruction concerning use of the charger by a person responsible for their safety. Children should be supervised to ensure that they do not play with the charger.

INFORMATIONS IMPORTANTES DE SÉCURITÉ Ce manuel contient des instructions importantes concernant la sécurité et le fonctionnement.

Attention

Recharger uniquement les batteries de type Lithium-Ion 48V activées par Samsung SDI. Autres types de batteries pourraient exploser causant des blessures corporelles et des dommages. Ne jamais charger une batterie gelée. Prendre connaissance des mesures de précaution spécifiées par le fabricant de la batterie.

Danger

Risque de décharge électrique. Ne pas toucher les parties non isolées du connecteur de sortie ou les bornes non isolées de la batterie. Toujours connecter le chargeur à une prise de courant mise à la terre. Déconnectez la source AC avant de faire ou défaire les connections à la batterie en chargement. Ne pas utiliser le chargeur si le cordon d'alimentation AC est endommagé ou si le chargeur est abîmé suite à une chute ou autre indicent. Ne pas ouvrir ni désassembler le chargeur – référer toute réparation aux personnes qualifiées. Cet appareil n'est pas destiné à un usage par des personnes (dont les enfants) avec des facultés motrices, sensorielles ou mentales réduites, ou ayant une expérience et des connaissances insuffisantes, à moins qu'elles sont sous la supervision ou reçoivent les instructions sur l'utilisation de l'appareil d'un répondant garant de leur sécurité. Les enfants devraient être surveillés afin qu'il ne jouent en aucun temps avec l'appareil.

Maintenance Instructions

1. Do not expose charger to high pressure water spray when cleaning vehicle.
2. The enclosure of the charger meets IP66, making it dust-tight and protected against powerful water jets. The AC connection is rated to IP20, which is not protected against water. Protect the AC connection if used in wet or dusty environments.
3. If the detachable input power supply cord set is damaged, replace with a cord that is appropriate for your region:
   - This charger is provided with a cord set for connection to outlets operating at nominal 120 Volts (or 240 Volts as appropriate). If the input plug does not fit the power outlet, contact Delta-Q Technologies for the proper cord set terminating in an attachment plug of the proper configuration for the power outlet.
   - 'North America: UL or CSA listed / approved detachable cord, 3 conductor, 16AWG minimum and rated SJT; terminated in a grounding type IEC 60320 C14 plug rated 250V, 13A minimum
   - For all other regions: Safety approved detachable cord, 3 conductor, 1.5mm^2 minimum, rated appropriately for industrial use. The cord set must be terminated on one end with a grounding type input connector appropriate for use in the country of destination and, on the other end, an output grounding type IEC 60320 C14 plug.

© 2016 Delta-Q Technologies Corp. All rights reserved.
(PN: 710-0219 Rev 2 Date: 01/12/2017)

Operating Instructions

CAUTION: Charger enclosure may be hot during charging. Use hand protection if handling the charger while charging.

- Extension cords must be 3-wire cord no longer than 30m(100') at 10AWG or 7.5m(25') at 16AWG per UL guidelines.
- Only connect **ONE** QuiQ charger to a single 15A circuit or the circuit may become overloaded.

Charger 10-LED Display

Ammeter

Displays scale of output current

- If only ammeter and AC Indicator LEDs are lit: Less than 80% state of charge
- If flashing: Output has been reduced due to high internal charger temperature.

Charge Indicator (Orange Light)

- If solid: Greater than 80% state of charge
- If off: Less than 80% state of charge or pre-charge

Charge Completion Indicator (Green Light)

- If solid: Charging is complete

AC Indicator (Orange Light)

- If solid: AC power is present.
- If flashing: Low AC voltage. Check electrical source and cord length.

Fault Indicator (Red Light)

- Charger error. Refer to troubleshooting information below.

Receptacle Display

LED	Indication
Solid	Charge complete
Long flash	Greater than 80% state of charge
Short flash	Less than 80% state of charge
Off	See charger for indications.

Troubleshooting Instructions

If a fault occurs, count the number of red flashes between pauses and refer to the table below.

Flashes	Cause	Solution
II ✱ ✱ II	Charger unable to apply wake-up pulse	Refer cart to service department
II ✱ ✱ ✱ II	Charge timeout	Possible BMS error - refer cart to service department
II ✱ ✱ ✱ ✱ II	BMS fault	Refer cart to service department
II ✱ ✱ ✱ ✱ ✱ II	Charger shutdown due to high internal temperature.	Ensure sufficient cooling airflow. Reset the charger by interrupting AC power for 15+ seconds.
II ✱ ✱ ✱ ✱ ✱ ✱ II	Internal charger fault	Reset the charger by interrupting AC power for 15+ seconds. Return to service department if fault persists.

Note: This is a Class A product. In a domestic environment this product may cause radio interference, in which case the user may be required to take adequate measures.

APPENDIX B

RC900 CHARGER USER'S GUIDE

RC900 ELiTE Onboard Charger Original User Manual

This manual contains important safety and operating instructions for this version of the Delta-Q RC900 ELiTE Onboard Charger (Part No. 944-0003) for use with E-Z-GO ELiTE lithium brand vehicles (Model 673928). For manufacturer contact information and technical support, please visit http://support.delta-q.com/.

SAVE THESE SAFETY INSTRUCTIONS
This manual contains important safety & operating instructions. Read before using the charger.

Warning

Charge only 48V lithium-ion type batteries activated by Samsung SDI. Other types of batteries may burst causing personal injury and damage. The Samsung Battery Management System (BMS) ensures that in all operating modes, the battery cells are protected from inappropriate levels of voltage, current, temperature, and state of charge. Never charge a frozen battery. Study the battery manufacturer's specific precautions before using this charger.

Danger

Risk of electric shock. Connect charger power cord to an AC outlet that has been properly installed and grounded in accordance with all local codes and ordinances. A grounded AC outlet is required to reduce the risk of electric shock—do not use ground adapters or modify the plug. Do not touch uninsulated portions of the output connector or uninsulated battery terminals. Disconnect the AC supply before making or breaking the connections to the battery. Do not open or disassemble the charger. Do not operate this charger if the AC supply cord or DC output cord is damaged or if the charger is damaged in any way. Refer all repair work to the manufacturer, or qualified personnel. This charger is not intended for use by persons (including children) with reduced physical, sensory or mental capabilities, or lack of experience and knowledge on electrical systems and battery charging, unless they have been given supervision or instruction concerning use of the charger by a person responsible for their safety. Children should be supervised to ensure they do not play with the charger.

Manuel d'origine de l'utilisateur du Chargeur À bord RC900 ELiTE

Le présent manuel contient d'importantes consignes de sécurité et d'utilisation pour cette version du chargeur Delta-Q à bord RC900 ELiTE (numéro de référence 944-0003) pour utilisation avec les véhicules de marque E-Z-GO ELiTE alimentés par des batteries au lithium-ion (Modèle 673928). Pour les coordonnées et le soutien technique du fabricant, visitez http://support.delta-q.com/.

CONSERVEZ CES CONSIGNES DE SÉCURITÉ
Le présent manuel contient d'importantes consignes de sécurité et d'utilisation. Lisez-les avant d'utiliser le chargeur.

Attention

Chargez uniquement les batteries au lithium-ion 48 V activées par Samsung SDI. Les autres types de batteries pourraient exploser causant des blessures corporelles et des dommages. Le système de gestion des batteries intégrés (BMS) garantit que dans tous les modes de fonctionnement, les cellules de la batterie sont protégées contre les niveaux inappropriés de tension, de courant, de température et d'état de charge. Ne chargez jamais une batterie gelée. Prenez connaissance des mesures de précaution spécifiées par le fabricant de la batterie avant d'utiliser ce chargeur.

Danger

Risque de décharge électrique. Toujours connecter le cordon d'alimentation du chargeur à une prise de secteur CA proprement installée et mise à la terre conformément à tous les codes et règlements locaux.. Une prise secteur CA mise à la terre est nécessaire pour réduire le risque de choc électrique - n'utilisez pas d'adaptateurs de terre et ne modifiez pas la fiche. Ne pas toucher les parties non isolées du connecteur de sortie ou les bornes non isolées de la batterie. Déconnectez la source CA avant de faire ou défaire les connections à la batterie en chargement. Ne pas ouvrir ni désassembler le chargeur. Ne pas utilisez le chargeur si le cordon d'alimentation CA ou the cordon de sortie CC est endommagé ou si le chargeur est abîmé suite à une chute ou autre indicent – Référez toute reparation au fabricant ou aux personnes qualifiées. Cet appareil n'est pas destiné à un usage par des personnes (dont les enfants) avec des facultés motrices, sensorielles ou mentales réduites, ou ayant une expérience et des connaissances insuffisantes, à moins qu'elles sont sous la supervision ou reçoivent les instructions sur l'utilisation de l'appareil par une personne responsable de leur sécurité. Les enfants doivent être surveillés afin qu'il ne jouent en aucun temps avec le le chargeur.

© 2020 Delta-Q Technologies Corp. All rights reserved. (PN: 710-0259 Rev 1.0 Date: 10/14/2020)

Operating & Maintenance Instructions

- The charger may become hot during charging. Do not touch the charger when it is charging.
- To maintain safe operations, the unit automatically reduces its output power if the temperature rises above set thresholds, or if the AC input voltage is too low. The charger also reduces output power if it detects the battery pack is damaged.
- If power is interrupted, and then returns, the charger starts and continues to operate without hazard to the user, or damage to the batteries.
- Unplug the charger from AC when cleaning, moving, or conducting any maintenance or repair on the vehicle. No user serviceable parts are inside the charger. Do not remove the charger or the cover due to the risk of electrical shock.
- Do not expose the charger to oil, dirt, mud, or direct heavy water spray when cleaning the vehicle or machine.
- The enclosure on these chargers meets IP56, making it protected from dust ingress and powerful water jets. The AC receptacle requires an external AC cord which is not protected against dust or water. Protect this AC connection if the charger is used in wet or dusty environments. Inspect it regularly for contamination. If the charger and/or cord are in a damp location, use a Class A GFCI AC outlet.
- If the detachable AC input power cord or DC output cord is damaged, do not use the charger until they are replaced by a qualified service technical with cord sets appropriate to your region and application.
- To charge your vehicle, use a 3-wire extension cord less than 30m (100') at 10 AWG or 7.5m (25') at 16 AWG, per UL guidelines.

AC Receptacle Indicators

LED	Indication
Off	No AC Power. Check for AC cord damage; plug into AC power outlet; ensure AC outlet has power.
Slow Green Breathing	More than 80% state of charge.
Fast Green Breathing	Less than 80% state of charge.
Solid Green	Charge Complete
Rapid Amber Flash	Error. Unplug and plug the charger in again. If the error remains, contact a qualified service technician.
Solid Red	Fault. Unplug and plug the charger in again. If the fault remains, contact a qualified service technician.

Identifying Charger Serial Number

The serial number is printed on the front of the charger. Use this number when requesting technical support.

NOTE: This equipment has been tested and found to comply with the limits for a Class B digital device, pursuant to Part 15 of the FCC/ICES Rules. These limits are designed to provide reasonable protection against harmful interference in a residential installation. This equipment generates, uses, and can radiate radio frequency energy and, if not installed and used in accordance with the instructions, may cause harmful interference to radio communications.

Delta-Q Technologies Corp.
3755 Willingdon Ave.
Burnaby, B.C. V5G 3H3 CANADA
Phone: +1.604.327.8244

Email: support@delta-q.com
Web: www.delta-q.com
User Documentation: www.delta-q.com/resources

APPENDIX C

E-Z-GO ELITE CHARGER USER'S GUIDE

ELiTE

Lithium Golf Cart
Battery Charger

delta-q TECHNOLOGIES

Chargeur de batterie au lithium
pour chariot de golf

E-Z-GO ELiTE Charger Original User Manual

This manual contains important safety and operating instructions for these versions of the Delta-Q ELiTE Charger (Part Nos. 958-0001, 958-0002, 958-0003, and 958-0004) for use with E-Z-GO ELiTE lithium brand vehicles. Read this information in its entirety before using your ELiTE Charger. For manufacturer contact information and technical support, visit http://support.delta-q.com/.

SAVE THESE SAFETY INSTRUCTIONS

This manual contains important safety & operating instructions. Read before using the charger.

Warning

Charge only 48V lithium-ion type batteries activated by Samsung SDI. Other types of batteries may burst causing personal injury and damage. Never charge a frozen battery. Study the battery manufacturer's specific precautions before using this charger.

Danger

Risk of electric shock. Connect charger power cord to an AC outlet that has been properly installed and grounded in accordance with all local codes and ordinances. A grounded AC outlet is required to reduce risk of electric shock – do not use ground adapters or modify the plug. Do not touch uninsulated portions of the output connector or uninsulated battery terminals. Disconnect the AC supply before making or breaking the connections to the battery. Do not open or disassemble the charger. Do not operate the charger if the AC supply cord or DC output cord is damaged or if the charger has received a sharp blow, been dropped, or is damaged in any way. Refer all repair work to the manufacturer or qualified personnel. This charger is not intended for use by persons (including children) with reduced physical, sensory or mental capabilities, or lack of experience and knowledge on electrical systems and battery charging, unless they have been given supervision or instruction concerning use of the charger by a person responsible for their safety. Children should be supervised to ensure they do not play with the charger.

© 2020 Delta-Q Technologies Corp. All rights reserved.
3755 Willingdon Avenue Burnaby, BC V5G 3H3 CANADA
(PN: 710-0240 Rev 2 Date: 10/14/2020)

Manuel d'origine de l'utilisateur du Chargeur E-Z-GO ELiTE

Le présent manuel contient d'importantes consignes de sécurité et d'utilisation pour ces versions du Chargeur Delta-Q ELiTE (numéros de référence 958-0001, 958-0002, 958-0003, et 958-0004) pour utilisation avec les véhicules de marque E-Z-GO ELiTE alimentés au lithium. Lisez en entier les informations fournies avant d'utiliser le Chargeur ELiTE. Pour les coordonnées et le soutien technique du fabricant, visitez http://support.delta-q.com/.

CONSERVEZ CES CONSIGNES DE SÉCURITÉ

Le présent manuel contient d'importantes consignes de sécurité et d'utilisation. Lisez-les avant d'utiliser le chargeur.

Mise en garde

Chargez uniquement les batteries au lithium-ion 48 V activées par Samsung SDI. Les autres types de batteries pourraient exploser causant des blessures corporelles et des dommages. Ne chargez jamais une batterie gelée. Prenez connaissance des mesures de précaution spécifiées par le fabricant de la batterie avant d'utiliser ce chargeur.

Danger

Risque de choc électrique. Branchez le cordon d'alimentation du chargeur à une prise CA qui a été correctement installée et mise à la terre conformément à tous les codes et règlements locaux en matière d'électricité. Une prise CA mise à la terre est requise pour réduire les risques d'électrocution; n'utilisez pas d'adaptateurs de terre ou ne modifiez pas la fiche. Ne touchez pas la partie non isolée du connecteur de sortie ou les bornes de la batterie non isolées. Débranchez l'alimentation CA avant d'effectuer ou de rompre les connexions à la batterie. N'ouvrez pas ou ne démontez pas le chargeur. N'utilisez pas le chargeur si son cordon d'alimentation CA ou son cordon de sortie CC est endommagé ou si le chargeur a reçu un coup violent, s'il est tombé ou s'il a été endommagé de quelque façon que ce soit. Le chargeur ne doit être réparé que par le fabricant ou du personnel qualifié. Ce chargeur n'est pas conçu pour être utilisé par des personnes (y compris les enfants) ayant des capacités physiques, sensorielles ou mentales réduites, ou manquant d'expérience et de connaissances des systèmes électriques et de la charge de batteries, à moins qu'une personne responsable de leur sécurité ne les supervise ou ne leur ait fourni les consignes d'utilisation. Les enfants doivent être supervisés pour s'assurer qu'ils ne jouent pas avec le chargeur.

Maintenance Instructions

1. The enclosure on all charger models meets IP56, making it protected from dust ingress and powerful water jets. The AC connection on the 958-0002 and 958-0004 models requires an external AC cord and is rated to IP20, which is not protected against dust or water. Protect this AC connection if the charger is used in wet or dusty environments and inspect it regularly for contamination.
2. If the AC power supply cord is damaged:
   - The 958-0001 and 958-0003 charger models have an integral AC cord for connection to North American outlets operating at 120 Volts nominal. If this AC power supply cord is damaged, do not use the charger and send it to a qualified service technician for repair.
   - The 958-0002 and 958-0004 charger models have a 7-inch (185mm) AC cord terminated with an IEC 320 C14 plug. If this AC power supply cord is damaged, do not use the charger and send it to a qualified service technician for repair. If the mating AC cord to the wall outlet is damaged, replace it with a 6 feet (1.83 meter) long UL/CSA approved AC cord with a grounded IEC 320 C13 socket rated 250V, 13A minimum on the charger side and an approved 3-prong grounded plug compatible with the local AC power outlet (110VAC to 240VAC). If the 3-prong grounded plug does not fit the local AC power outlet, contact E-Z-GO or Delta-Q Technologies for the proper cord for the local AC power outlet.
   - For regions with 220-240V mains supply, select a safety approved AC cord, 3-conductor, 1.0mm² minimum, rated appropriately for industrial use. The cord must be terminated on one end with a grounded input connector appropriate for the AC power in the country of destination and, on the charger end, a grounding type IEC 320 C13 socket.

NOTE: This equipment has been tested and found to comply with the limits for a Class B digital device, pursuant to Part 15 of the FCC/ICES Rules. These limits are designed to provide reasonable protection against harmful interference in a residential installation. This equipment generates, uses, and can radiate radio frequency energy and, if not installed and used in accordance with the instructions, may cause harmful interference to radio communications.

Mounting Instructions

The charger can be mounted horizontally or vertically with the cables and LED indicators pointing downward. Five (5) robust mounting points are cast into the charger's aluminum enclosure and another mounting hole in the center of the handle. The charger can be screwed to a table or wall with the four (4) slotted mounting holes, two (2) on each side using M6 or ¼-inch fasteners. A vertical mounting from the single cast keyhole mounting slot opposite the cables is possible using a suitable 8 or 10mm or 3/8-inch J-hook. A suspended horizontal mounting is achieved using a ceiling secured 5/16-inch threaded rod secured with nuts above and below the handle.

Consignes d'entretien

1. Le boîtier en tout modèles de chargeur est conforme à la norme IP56, le protégeant ainsi contre l'infiltration de poussière et les jets d'eau puissants. Le branchement CA sur les modèles 958-0002 et 958-0004 nécessite un cordon CA externe et est conforme à la norme IP20, qui n'offre pas de protection contre la poussière ou l'eau. Protégez ce branchement CA si le chargeur est utilisé dans un environnement humide ou poussiéreux et inspectez le régulièrement pour déceler toute contamination.
2. Si le cordon d'alimentation CA est endommagé :
   - Les modèles de chargeur 958-0001 et 958-0003 sont équipés d'un cordon CA intégré pour le branchement sur les prises en Amérique du Nord fonctionnant à une tension nominale de 120 volts. Si ce cordon d'alimentation CA est endommagé, n'utilisez pas le chargeur et envoyez-le à un technicien de service qualifié pour la réparation.
   - Les modèles de chargeur 958-0002 et 958-004 sont équipés d'un cordon d'alimentation CA de 7 pouces (185 millimètre) se terminant par une fiche IEC 320 C14. Si ce cordon d'alimentation CA est endommagé, n'utilisez pas le chargeur et envoyez-le à un technicien de service qualifié pour la réparation. Si le cordon d'alimentation CA d'accouplement à la prise murale est endommagé, remplacez le par un cordon d'alimentation CA approuvé UL/CSA de 6 pieds (1,83 m) de longueur avec une prise IEC 320 C13 reliée à la terre fonctionnant à une tension nominale de 250 V, 13A minimum au côté chargeur et une fiche mise à la terre approuvée à 3 broches compatible avec la prise de courant CA locale (110 V c.a. à 240 V c.a.). Si la fiche mise à la terre à 3 broches ne convient pas à la prise de courant CA locale, communiquez avec E-Z-GO ou Delta-Q Technologies pour connaître le cordon approprié pour la prise de courant CA locale.
   - Pour les régions utilisant une alimentation secteur 220-240 V, sélectionnez un cordon d'alimentation CA approuvé, à 3 conducteurs, 1,0 mm² minimum, évalué de façon appropriée pour une utilisation industrielle. Le cordon doit se terminer, à une extrémité, par un connecteur d'entrée mis à la terre approprié pour l'alimentation CA dans le pays de destination et, à l'extrémité du chargeur, par une fiche IEC 320 C13 mise à la terre.

REMARQUE: cet équipement a été testé et déclaré conforme aux limites pour appareils numériques de classe B, selon la section 15 des règlements de la FCC et de l'ICES. Ces limites sont destinées à assurer une protection raisonnable contre les interférences nuisibles dans une installation résidentielle. Cet équipement produit, utilise et peut émettre de l'énergie radio électrique et, s'il n'est pas installé et utilisé conformément aux présentes instructions, peut causer des interférences nuisibles aux communications radio.

Instructions de montage

Le chargeur peut être monté à l'horizontale ou à la verticale avec les câbles et les indicateurs DEL orientés vers le bas. Cinq (5) points de montage robustes sont moulés dans le boîtier en aluminium du chargeur et un autre trou de montage se trouve dans le centre de la poignée. Le chargeur peut être vissé sur une table ou un mur avec les quatre (4) fentes de montage, deux (2) de chaque côté, à l'aide d'attaches M6 ou de 1/4 de pouce. Un montage vertical à partir de la fente de montage en forme de trou de serrure à l'opposé des câbles est possible à l'aide d'un crochet en J approprié de 8 ou de 10 mm ou de 3/8 po. Un montage horizontal suspendu se réalise à l'aide d'une tige filetée de 5/16 po fixée au plafond avec des écrous au-dessus et en-dessous de la poignée.

© 2020 Delta-Q Technologies Corp. All rights reserved.

Operating Instructions

CAUTION: The charger enclosure may be hot during charging. Use hand protection if handling the charger while charging.

- The extension cord must be a 3-wire cord less than 30m (100') at 10AWG or 7.5m (25') at 16AWG per UL guidelines.
- If you are connecting four (4) ELiTE Chargers to a single 120V mains circuit, a 20A circuit is recommended.

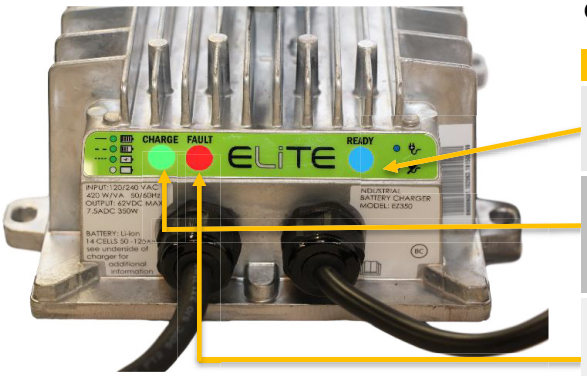

Charger Indicators

Indicator	Indication
AC Indicator Blue Light	• If solid, AC power is present.
Charger Status Indicator Green Light	• If solid, charging is complete. • If slow breathing, it is more than 80% charged. • If fast breathing, it is less than 80% charged.
Fault Indicator Red Light	• Charger error. Refer to *Troubleshooting Instructions*.

Note: The charger will flash green when the lithium Battery Management System (BMS) is in wakeup mode.

DC Receptacle Indicators

LED	Indication
Solid	Charging is complete.
Slow Flash	More than 80% state of charge.
Fast Flash	Less than 80% state of charge.
Off	See charger indicators for status.

© 2020 Delta-Q Technologies Corp. All rights reserved.

Mode d’emploi

MISE EN GARDE : Le boîtier du chargeur peut devenir chaud pendant le chargement. Utilisez une protection pour les mains si vous manipulez le chargeur pendant le chargement.

- La rallonge électrique doit être un cordon à 3 fils de moins de 30 m (100 pi) de long à 10 AWG ou 7,5 m (25 pi) à 16 AWG selon les directives UL.
- Si vous connectez **quatre (4) chargeurs ELiTE** à un seul circuit de 120V, un circuit de 20 A est recommandé.

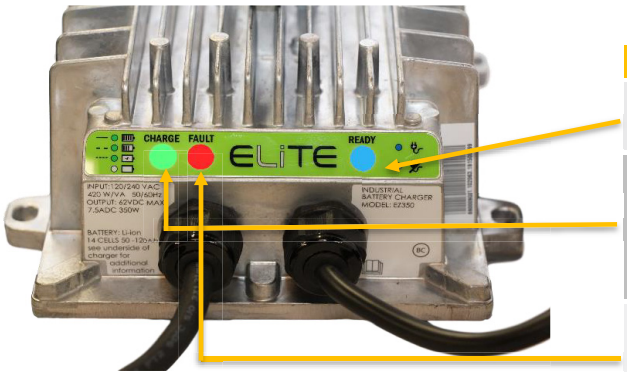

Indicateurs du chargeur

Indicateur	Indication
Indicateur CA Voyant bleu	• Si constant, il y a une alimentation CA.
Indicateur de l’état du chargeur Voyant bleu	• Si constant, la charge est terminée. • Si la pulsation est lent, la batterie est chargée à plus de 80%. • Si la pulsation est rapide, la batterie est chargée à moins de 80%.
Indicateur de défaut Voyant rouge	• Erreur du chargeur. Consultez les *Instructions de dépannage*.

Remarque: le chargeur clignotera en vert lorsque le système de gestion de la batterie au lithium est en mode d’éveil.

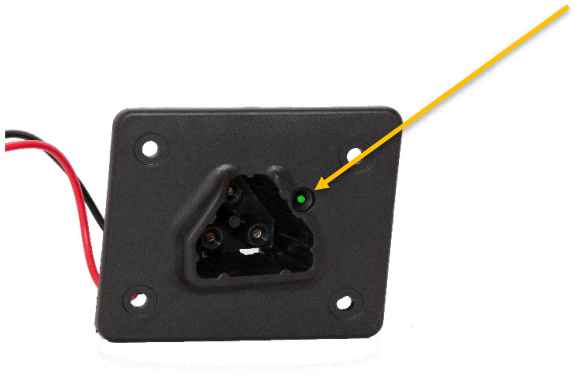

Indicateurs de prise de courant CC

DEL	Indication
Constant	La charge est terminée.
Clignotement lente	Charge de plus de 80%.
Clignotement rapide	Charge de moins de 80%.
Éteint	Voir les indicateurs du chargeur pour l’état.

© 2020 Delta-Q Technologies Corp. All rights reserved.

Troubleshooting Instructions

If a fault occurs, count the number of red flashes between pauses and refer to this table:

Flashes	Cause	Solution
	The lithium battery pack issued a fault indicating a wiring or charger hardware issue.	Check the green DC paddle and receptacle for damage, corrosion, and ensure it is properly inserted. Reset the charger by interrupting AC power for 15+ seconds. If the fault returns, contact E-Z-GO Customer Care.
	The charge time or amp-hour limit was exceeded.	Check the green DC paddle and receptacle for damage, corrosion, and ensure it is properly inserted. Ensure the charger has sufficient cooling airflow in ambient temperatures below 40°C; if in the sun, move to the shade. Reset the charger by interrupting AC power for 15+ seconds. If the fault returns, contact E-Z-GO Customer Care.
	The lithium battery pack shut down charging and issued a fault.	Reset the lithium battery pack by turning the ignition and tow mode off, remove the green charger paddle from the receptacle, wait 5+ seconds, re-insert the paddle. If the fault returns, contact E-Z-GO Customer Care.
	Internal charger fault	Reset the charger by interrupting AC power for 15+ seconds. If the fault returns, contact E-Z-GO Customer Care.

Instructions de dépannage

S'il survient une erreur, comptez le nombre de clignotements rouges entre les pauses et reportez-vous au tableau suivant :

Clignotement	Cause	Solution
	Le bloc-batterie au lithium a émis un défaut indiquant un problème de câblage ou de matériel du chargeur.	Vérifiez la palette CC verte et la prise pour vous assurer qu'il n'y a pas de dommage ou de corrosion et assurez-vous qu'elle est bien insérée. Réinitialisez le chargeur en interrompant l'alimentation CA pendant 15 secondes ou plus. Si le défaut revient, communiquez avec le service à la clientèle E-Z-GO.
	La limite de temps de charge ou d'ampères par heure a été dépassée.	Vérifiez la palette CC verte et la prise pour vous assurer qu'il n'y a pas de dommage ou de corrosion et assurez-vous qu'elle est bien insérée. Assurez-vous que le chargeur a suffisamment de circulation d'air de refroidissement dans les températures ambiantes inférieures à 40° C. Si le chargeur est au soleil, mettez-le à l'ombre. Réinitialisez le chargeur en interrompant l'alimentation CA pendant 15 secondes ou plus. Si le défaut revient, communiquez avec le service à la clientèle E-Z-GO.
	Le bloc-batterie au lithium a arrêté la charge et a émis un défaut.	Réinitialisez le bloc-batterie au lithium en coupant l'allumage et en désactivant le mode de remorquage, enlevez la palette verte du chargeur de la prise, attendez 5 secondes ou plus et réinsérez la palette. Si le défaut revient, communiquez avec le service à la clientèle E-Z-GO.
	Défaut interne du chargeur	Réinitialisez le chargeur en interrompant l'alimentation CA pendant 15 secondes ou plus. Si le défaut revient, communiquez avec le service à la clientèle E-Z-GO.

www.delta-q.com

© 2020 Delta-Q Technologies Corp. All rights reserved.

TEXTRON SPECIALIZED VEHICLES, INC.
1451 Marvin Griffin Road
Augusta, Georgia 30906 - 3852
USA

CONTACT INFORMATION

North America:

Technical Assistance & Warranty:
Phone: 1-800-774-3946
Service Parts Phone:
1-888-GET-E-Z-GO (1-888-438-3946)

International:

Phone: 001-706-798-4311

California Proposition 65

⚠ WARNING

Operating, servicing and maintaining a passenger vehicle or off-road vehicle can expose you to chemicals including phthalates and lead, which are known to the State of California to cause cancer and birth defects or other reproductive harm. To minimize exposure, wear gloves and wash your hands frequently when servicing your vehicle.
For more information go to www.P65Warnings.ca.gov/passenger-vehicle

Parts Manuals and Service Manuals are available from a local Distributor, an authorized Branch, Genuine E-Z-GO Parts & Accessories Department or at www.shopezgo.com.

Copyrighted Material
This manual may not be reproduced in whole or in part without the express permission of the manufacturer.